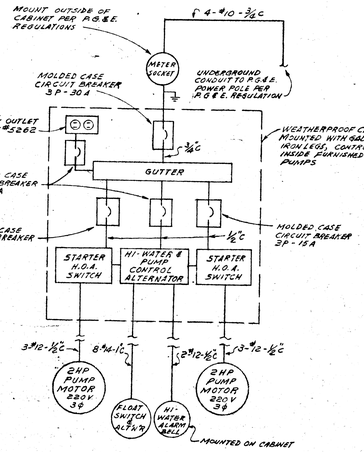

ELECTRICAL WIRING DIAGRAM

NOT TO SCALE

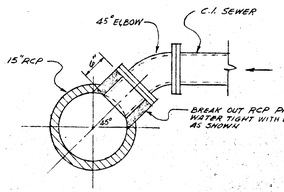

TYPICAL SIDE SEWER CONNECTION

NOT TO SCALE

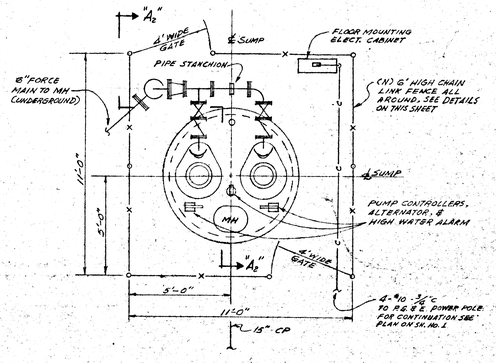

PUMPING STATION PLAN

NOT TO SCALE

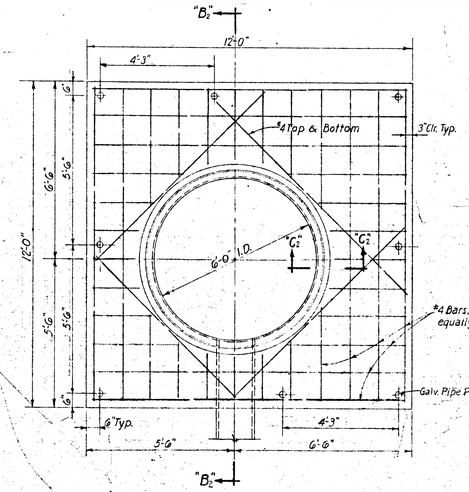

PLAN

Scale 1/2"=1'-0"

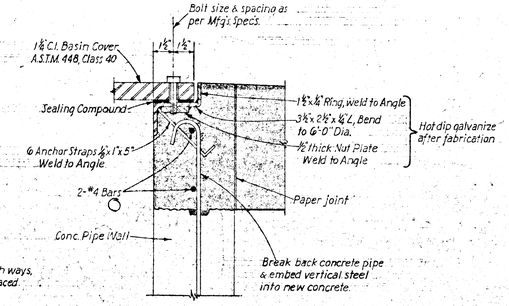

SECTION C_2-C_2

Scale 3"=1'-0"

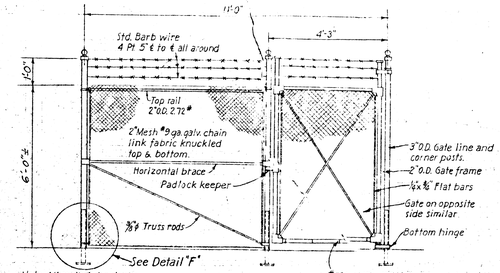

Note: All material galvanized after fabrication.

DETAIL OF FENCE & GATE

Scale 1/2"=1'-0"

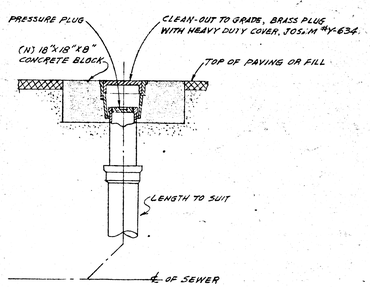

TYPICAL CLEAN-OUT TO GRADE FOR GRAVITY AND FORCE MAIN SEWERS

MAX. SPACING 200 FT. O.C.

NOT TO SCALE

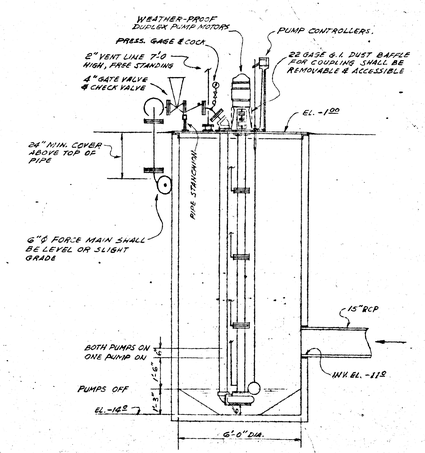

SECTION A_2-A_2

NOT TO SCALE

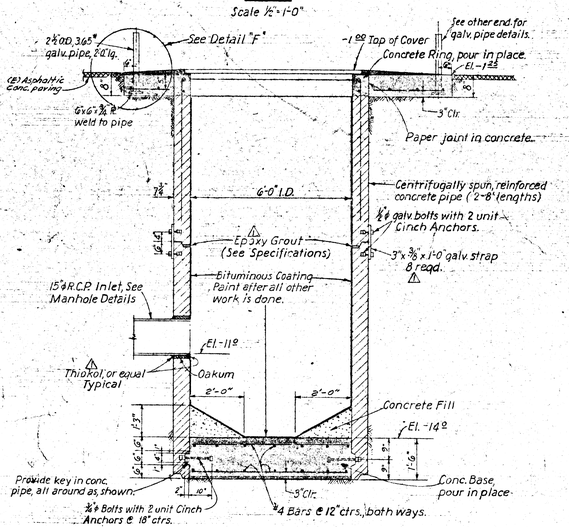

SECTION B_2-B_2

Scale 1/2"=1'-0"

CONCRETE SUMP DETAILS △

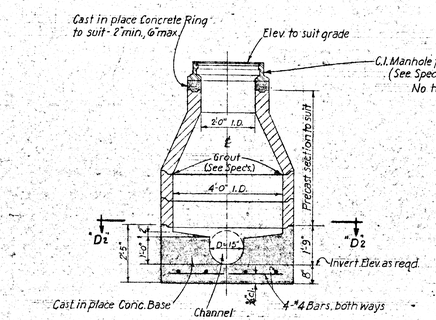

TYPICAL SECTION-TAPERED MANHOLE

For Manholes No. 1, 7 & 8

Scale 1/2"=1'-0"

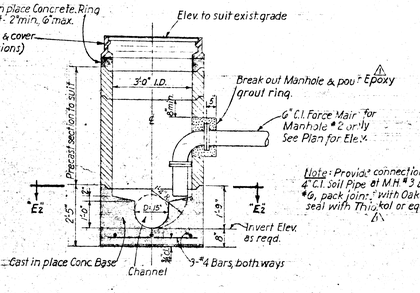

Note: Provide connection for 4" C.I. Soil Pipe at M.H. #3 & M.H. #6, pack joints with Oakum & seal with Thiokol or equal.

TYPICAL SECTION-STRAIGHT MANHOLE

For Manholes No. 2, 3, 4, 5 & 6

Scale 1/2"=1'-0"

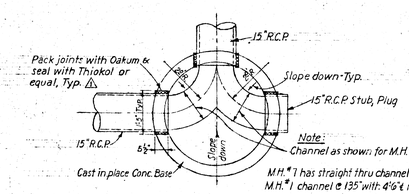

Note: Channel as shown for M.H. #8

M.H. #7 has straight thru channel
M.H. #1 channel @ 135° with 4'6" ℄ radius } See Plan Sh. #1

SECTION D_2-D_2

Scale 1/2"=1'-0"

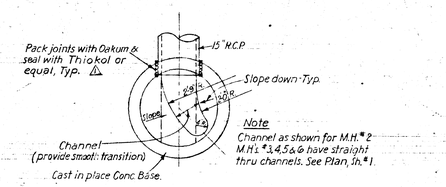

Note

Channel as shown for M.H. #2
M.H.'s #3, 4, 5 & 6 have straight thru channels. See Plan, Sh. #1.

SECTION E_2-E_2

Scale 1/2"=1'-0"

MANHOLE DETAILS

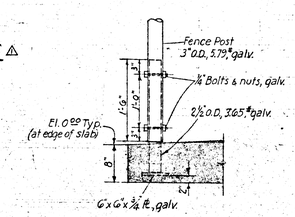

DETAIL "F"

Scale 1"=1'-0"

Total Head

Static 12' (6 psi)

Friction

$5000 = \frac{2'}{100} = \frac{100}{112'}$ (50 psi)

Head

Flow

Epoxy Grout (Concressive #1, Adhesive Engr. Co. or approved equal) supersedes Specifications.

FOR LEGEND & NOTES SEE SHEET No. 1

NO.	DATE	DESCRIPTION
△	5-5-64	General revisions

REVISIONS

APPROVED BY SAN FRANCISCO PORT AUTHORITY
DATE 5-26-64
CHIEF ENGINEER

SAN FRANCISCO PORT AUTHORITY
PORT OF SAN FRANCISCO
DEPARTMENT OF ENGINEERING

SEWERAGE SYSTEM
PIER 92 AREA
DETAILS

IN CHARGE OF R.F.Q. | CHECKED BY
MADE BY C.Y. | DATE 4-9-64
TRACED BY R.V.S., C.Y. | SCALE AS SHOWN
DRAWING NO. 7041-344-4 | SHEET NO. 2 OF 3 SHEETS

If this image appears cut-off or is not as legible as this overlay, it's due to the poor quality of the original document