## LEGEND

OBJECT TO BE REMOVED

WALL TO BE REMOVED

EXISTING WALL TO REMAIN

NEW 2- HOUR RATED WALL - 2x4 STUDS

## VICINITY MAP

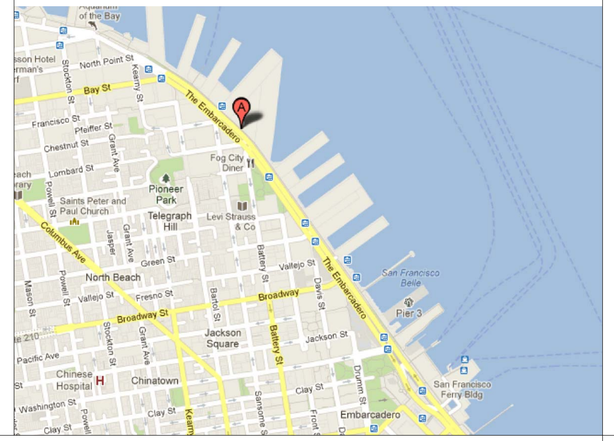


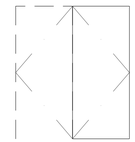

A-
FLUSH PANEL PAIR

DOOR TYPES

| DOOR NO. | FLOOR | ROOM | SIZE | JAMB MATERIAL | DOOR MATERIAL | FIN. | DOOR TYPE | DOOR THK. | HARDWARE FUNCTION | NOTES |
|---|---|---|---|---|---|---|---|---|---|---|
| 1 | FIRST FLOOR | MENS | 6'-0" x 7'-0" (PAIR) | HM | HM | PAINT | A | 1 3/4" | STORAGE ROOM | 90 MIN FIRE RATED |

HARDWARE SCHEDULE

1. TBD

DOOR SCHEDULE


Michael Tauber Architecture
2325 Third Street, Ste 322
San Francisco, CA 94107
p. 415.252.7044

Creegan+D'Angelo INFRASTRUCTURE ENGINEERS
170 Columbus Ave., Suite 240
San Francisco, CA 94133
Tel (415) 834-2010
Fax (415) 834-2011
www.cdengineers.com

LICENSED ARCHITECT MICHAEL TAUBER C 25947 12/31/13 Renewal Date STATE OF CALIFORNIA


## ABBREVIATIONS

| | |
|---|---|
| A.C. | AIR CONDITIONING |
| A.C. TILE | ACOUSTIC TILE |
| ACCESS. | ACCESSIBLE |
| ACOUST. | ACOUSTICAL |
| A.P. | ACCESS PANEL |
| A.D. | AREA DRAIN |
| ADJ. | ADJACENT |
| ADJST. | ADJUSTABLE |
| A.E.S. | ABOVE EXISTING SLAB |
| A.E.S.S. | ARCHITECTURAL EXPOSED STRUCTURAL STEEL |
| A.F.F. | ABOVE FINISHED FLOOR |
| AGGR. | AGGREGATE |
| AL . | ALUMINUM |
| ALUM. | ALUMINUM |
| APPROX. | APPROXIMATELY |
| ARCH. | ARCHITECTURAL |
| ASB. | ASBESTOS |
| ASPH. | ASPHALT |
| @ | AT |
| BD. | BOARD |
| BITUM. | BITUMINOUS |
| BLDG. | BUILDING |
| BLK. | BLOCK |
| BLK'G | BLOCKING |
| BM. | BEAM |
| B.O. | BOTTOM OF |
| BOT. | BOTTOM |
| CAB. | CABINET |
| C.B. | CATCH BASIN |
| CEM. | CEMENT |
| CER. | CERAMIC |
| C.I. | CAST IRON |
| C.L. | CENTER LINE |
| CLG. | CEILING |
| CLKG. | CAULKING |
| CLO. | CLOSET |
| CLR. | CLEAR |
| C.M.U. | CONCRETE MASONRY UNIT |
| CNTR. | COUNTER |
| CO. | TRANSLUCENT CORIAN |
| COL. | COLUMN |
| COM. | COMPACT |
| CONC. | CONCRETE |
| CONN. | CONNECTION |
| CONSTR. | CONSTRUCTION |
| CONT. | CONTINUOUS |
| CORR. | CORRIDOR |
| C.S.C.I. | CONTRACTOR SUPPLIED CONTRACTOR INSTALLED |
| C.T. | CERAMIC TILE |
| CTR. | CENTER |
| CTSK. | COUNTERSUNK |
| DBL. | DOUBLE |
| DEPT. | DEPARTMENT |
| DET. | DETAIL |
| D.F. | DRINKING FOUNTAIN |
| DIA. | DIAMETER |
| DIM. | DIMENSION |
| DN. | DOWN |
| D.O. | DOOR OPENING |
| DRESS. | DRESSING |
| DS. | DOWNSPOUT |
| D.S.P. | DRY STANDPIPE |
| DTL. | DETAIL |
| DWG. | DRAWING |
| E. | EAST |
| (E) | EXISTING |
| EA. | EACH |
| E.J. | EXPANSION JOINT |
| EL. | ELEVATION |
| ELEC. | ELECTRICAL |
| ELEV. | ELEVATOR |
| EMER. | EMERGENCY |
| ENCL. | ENCLOSURE |
| E.P. | ELECTRICAL PANEL BOARD |
| EQ. | EQUAL |
| EQPT. | EQUIPMENT |
| ESC. | ESCALATOR |
| E.W.C. | ELECTRIC WATER COOLER |
| EXIST. | EXISTING |
| EXP. | EXPANSION |
| EXPO. | EXPOSED |
| EXT. | EXTERIOR |
| F.A. | FIRE ALARM |
| F.B. | FLAT BAR |
| F.D. | FLOOR DRAIN |
| FDN. | FOUNDATION |
| F.E.C. | FIRE EXTINGUISHER CABINET |
| F.H.C. | FIRE HOSE CABINET |
| FIN. | FINISH |
| FIXT. | FIXTURE |
| F.L. | FLOW LINE |
| FLASH. | FLASHING |
| FLUOR. | FLUORESCENT |
| F.O. | FACE OF |
| F.O.C. | FACE OF CONCRETE |
| F.O.F. | FACE OF FINISH |
| F.O.S. | FACE OF STUDS |
| F.P. | FIRE PROOF |
| FPRF'G | FIRE PROOFING |
| F.R. | FIRE RETARDANT |
| F.T. | FIRE TREATED |
| FT. | FOOT/FEET |
| FTG. | FOOTING |
| F.S. | FULL SIZE |
| FURR. | FURRING |
| FUT. | FUTURE |
| GA. | GAUGE |
| GALV. | GALVANIZED |
| G.B. | GRAB BAR |
| G.C. | GENERAL CONTRACTOR |
| G.H. | GARMENT HOOK |
| GL. | GLASS |
| G.M. | GAS METER |
| GND. | GROUND |
| GR. | GRADE |
| GSM | GALVANIZED SHEET METAL |
| G.W.B. | GYPSUM WALLBOARD |
| GYP. | GYPSUM |
| GYPBD. | GYPSUM BOARD |
| H.B. | HOSE BIBB |
| H.C. | HOLLOW CORE |
| HD. | HAND |
| HDWD. | HARDWOOD |
| H.M. | HOLLOW METAL |
| HORIZ. | HORIZONTAL |
| HR. | HOUR |
| HT. | HEIGHT |
| I.D. | INSIDE DIAMETER |
| INSUL. | INSULATION |
| INT. | INTERIOR |
| JAN. | JANITOR |
| JT. | JOINT |
| KIT. | KITCHEN |
| L | ANGLE |
| LAM. | LAMINATE |
| LAV. | LAVATORY |
| LL | LANDLORD |
| LKR. | LOCKER |
| LT. | LIGHT |
| MANUF. | MANUFACTURER |
| MAX. | MAXIMUM |
| M.C. | MEDICINE CABINET |
| MDF | MEDIUM DENSITY FIBERBOARD |
| MECH. | MECHANICAL |
| MEMB. | MEMBRANE |
| MFR. | MANUFACTURER |
| MILL WK. | MILLWORK |
| M.H. | MANHOLE |
| MIN. | MINIMUM |
| MIR. | MIRROR |
| MISC. | MISCELLANEOUS |
| M.O. | MASONRY OPENING |
| MTL. | METAL |
| MTD. | MOUNTED |
| MUL. | MULLION |
| MWC | MILLWORK CONTRACTOR |
| N.I.C. | NOT IN CONTRACT |
| (N) | NEW |
| NO. | NUMBER |
| NOM. | NOMINAL |
| N.T.S. | NOT TO SCALE |
| # | NUMBER |
| O.A. | OVERALL |
| OBS. | OBSCURE |
| O.C. | ON CENTER |
| O.D. | OUTSIDE DIAMETER |
| OFF. | OFFICE |
| OPN'G | OPENING |
| OPP. | OPPOSITE |
| OPP. HD. | OPPOSITE HAND |
| O.S.C.I. | OWNER SUPPLIED CONTRACTOR INSTALLED |
| P. | PAINT |
| PC. | PRECAST CONCRETE |
| PCS. | PIECES |
| PL. | PLATE |
| PLAM. | PLASTIC LAMINATE |
| PLAS. | PLASTER |
| PLYWD. | PLYWOOD |
| POL. | POLISHED |
| PR. | PAIR |
| PRCST. | PRECAST |
| PT. | POINT |
| P.T.D. | PAPER TOWEL DISPENSER |
| PTD. | PAINTED |
| P.T.D./R. | PAPER TOWEL DISPENSER RECEPTACLE COMBINATION |
| PTN. | PARTITION |
| P.T.R. | PAPER TOWEL RECEPTACLE |
| PU. | POLYURETHANE |
| PY. | POLYCARBONATE |
| Q.T. | QUARRY TILE |
| R. | RISER |
| RAD. | RADIUS |
| RCP | REFLECTED CEILING PLAN |
| R.D. | ROOF DRAIN |
| RDWD. | REDWOOD |
| REF. | REFERENCE |
| REFR. | REFRIGERATOR |
| REINF. | REINFORCED |
| REG. | REGISTER |
| REQ. | REQUIRED |
| RESIL. | RESILIENT |
| RET. | RETARDANT |
| RGTR. | REGISTER (CASH) |
| RM. | ROOM |
| R.O. | ROUGH OPENING |
| R.W.L. | RAIN WATER LEADER |
| S. | SOUTH |
| S.B.O. | SUPPLIED BY OWNER |
| S.C. | SOLID CORE |
| S.C.D. | SEAT COVER DISPENSER |
| SCH. | SCHEDULE |
| SCHED. | SCHEDULE(D) |
| S.D. | SOAP DISPENSER |
| SECT. | SECTION |
| S.E.D. | SEE ELECTRICAL DRAWINGS |
| SH. | SHELF |
| SHR. | SHOWER |
| SHT. | SHEET |
| SIM. | SIMILAR |
| S.M.D. | SEE MECHANICAL DRAWINGS |
| S.N.D. | SANITARY NAPKIN DISPENSER |
| S.N.R. | SANITARY NAPKIN RECEPTACLE |
| S.P.D. | SEE PLUMBING DRAWINGS |
| SPEC. | SPECIFICATION |
| SPEC'D | SPECIFIED |
| SQ. | SQUARE |
| S.S.D. | SEE STRUCTURAL DRAWINGS |
| S.S.K. | SERVICE SINK |
| SST. | STAINLESS STEEL |
| ST. | STONE |
| STA. | STATION |
| STD. | STANDARD |
| STL. | STEEL |
| STOR. | STORAGE |
| STRUCT. | STRUCTURAL |
| SUSP. | SUSPENDED |
| SYM. | SYMMETRICAL |
| T. | TREAD |
| T.B. | TOWEL BAR |
| TC | TOP OF CURB |
| T.C. | TERRA COTTA |
| TEMP. | TEMPERED |
| TER. | TERRAZZO |
| THK. | THICK |
| T.O. | TOP OF |
| T.O.C. | TOP OF CONCRETE |
| T.O.P. | TOP OF PAVEMENT |
| T.O.S. | TOP OF SLAB |
| T.S. | TUBE STEEL |
| TYP. | TYPICAL |
| UNEQ. | UNEQUAL |
| U.O.N. | UNLESS OTHERWISE NOTED |
| UR. | URINAL |
| V.I.F. | VERIFY IN FIELD |
| VERT. | VERTICAL |
| VEST. | VESTIBULE |
| W. | WEST |
| W/ | WITH |
| W.C. | WATER CLOSET |
| WD. | WOOD |
| WDO. | WINDOW |
| W/O | WITHOUT |
| WP. | WALLPAPER |
| WT. | WEIGHT |

## SHEET INDEX


ARCHITECTURAL:
A0.0 PROJECT INFO, ABBREVIATIONS, VICINITY MAP, DOOR TYPES AND DOOR SCHEDULE
A1.0 CONSTRUCTION AND REFLECTED CEILING PLANS, PARTIAL EXT. ELEV, INT. ELEV AND SECTION

STRUCTURAL:
S1.0 GENERAL NOTES
S2.0 STRUCTURAL PLANS
S3.0 STRUCTURAL DETAILS

MECHANICAL:
M0.1 MECHANICAL ABBREVIATIONS, LEGEND AND GENERAL NOTES
M0.2 MECHANICAL EQUIPMENT SCHEDULES, DETAILS AND SPECIFICATIONS
M0.3 MECHANICAL SPECIFICATIONS
M2.1 MECHANICAL DEMOLITION PHOTO AND NEW WORK FLOOR PLANS
M3.1 MECHANICAL DETAILS
M3.2 MECHANICAL DETAILS

ELECTRICAL:
E1.1 ELECTRICAL LEGEND, ABBREVIATIONS AND LIGHTING NEW WORK ENLARGED PLAN


## APPLICABLE REGS & STDS

APPLICABLE CODES:

2010 PORT OF SAN FRANCISCO BUILDING CODE.
2010 PORT OF SAN FRANCISCO MECHANICAL CODE.
2010 PORT OF SAN FRANCISCO PLUMBING CODE.
2010 PORT OF SAN FRANCISCO ELECTRICAL CODE.
2010 CALIFORNIA FIRE CODE.
ENERGY CODE - TITLE 24 - CALIFORNIA CODE OF REGULATIONS
LIFE SAFETY CODE, 1999 NFPA 72
AMERICANS WITH DISABILITIES ACT

## DESIGN TEAM CONTACT INFORMATION


CLIENT:
PORT OF SAN FRANCISCO:
PIER 1, SAN FRANCISCO
94111

CONTACT:
PROJECT MANAGER, ARCHITECT, ADA COORDINATOR
WENDY PROCTOR, AIA, CASp
415-274-0592

STRUCTURAL ENGINEER/PRIME CONSULTANT:
CREEGAN + D'ANGELO
170 COLUMBUS AVENUE
SAN FRANCISCO CA 94108
PH: 415- 834-2010

CONTACT: DEAN SEDLACHEK

ARCHITECT:
MICHAEL TAUBER ARCHITECTURE
2325 THIRD STREET #322
SAN FRANCISCO, CA 94107
PH: 415-252-7044

CONTACT: MICHAEL TAUBER

PRESERVATION ARCHITECT:
CAREY & CO. INC. ARCHITECTURE
46-0 BUSH STREET
SAN FRANCISCO, CA 94108
PH: 415-773-0773

CONTACT: NANCY GOLDENBERG

MECHANICAL AND PLUMBING:
YEI ENGINEERS, INC
7700 EDGEWATER DRIVE, SUITE 128
OAKLAND , CA 94621
PH: 510-383-1050

CONTACT: ANDREA KING

ELECTRICAL ENGINEERING:
YEI ENGINEERS, INC
7700 EDGEWATER DRIVE, SUITE 128
OAKLAND , CA 94621
PH: 510-383-1050

CONTACT: BRANDON YEE


| NO. | DATE | DESCRIPTION | BY | APP. |
|---|---|---|---|---|

TABLE OF REVISIONS
CHECK WITH TRACING TO SEE IF YOU HAVE LATEST REVISION

REFERENCE INFORMATION & FILE NO. OF SURVEYS

SAN FRANCISCO PORT COMMISSION
PORT OF SAN FRANCISCO
DEPARTMENT OF ENGINEERING

DESIGNED: MT DATE:
DRAWN: JG/MT DATE:
CHECKED: MT DATE: 1/25/13

APPROVED BY SAN FRANCISCO PORT COMMISSION
DATE: _____
CHIEF HARBOR ENGINEER

SCALE: NONE
SHEET OF SHEETS

PIER 29
GAS METER REPLACEMENT

COVER SHEET

CONTRACT NO.
DRAWING NO. A0.0
FILE NO. XXXX-29-S
REV. NO.

VIEW: PLOT1

## GENERAL NOTES

1. SEE PLUMBING DRAWINGS FOR PLUMBING FIXTURES.
2. SEE ELECTRICAL DRAWINGS FOR LIGHTING & ELECTRICAL.
3. SEE A0.0 FOR DOOR SCHEDULE AND DOOR TYPES.

## CONSTRUCTION KEY NOTES

01 (N) 5/8" TYPE X GYP. BD. OVER (E) METAL STUDS - REPLACE IN KIND AS REQUIRED FULL LENGHT OF WALL, TAPE AND MUD FOR 1 HOUR WALL.

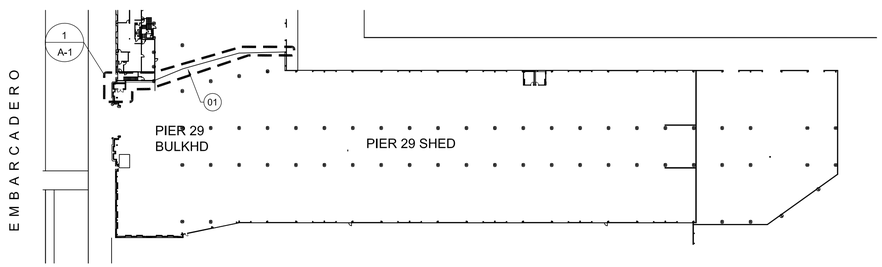


6 A1 PIER 29 KEY PLAN
SCALE: 1" = 80'-0"

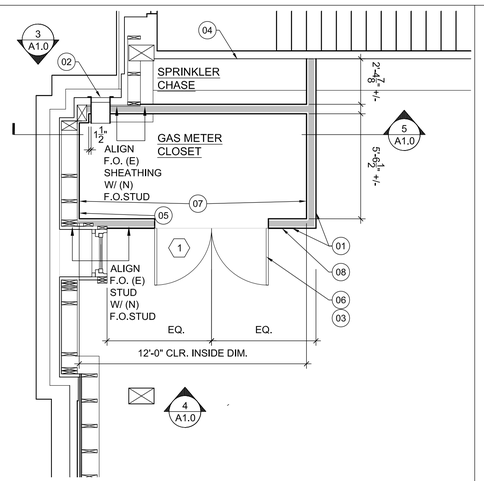


## CONSTRUCTION KEY NOTES

01 (N) 2X STUD WALL W/ 2 LAYERS OF 5/8" TYPE X GYP. BD. BOTH SIDES FOR 2 HOUR RATED WALL CONSTRUCTION (UL NO. U301). .

02 (N) WALL LOUVER, S.M.D.

03 DOORS TO BE VAPOR TIGHT PER PG&E J-16 DOCUMENT.

04 (N) 5/8" TYPE X GYP. BD. OVER (E) METAL STUDS - REPLACE IN KIND AS REQUIRED FULL LENGHT OF WALL, TAPE AND MUD FOR 1 HOUR WALL.

05 2 LAYERS OF 5/8" TYPE X GYP BD APPLIED TO INSIDE FACE OF STUD WALL.

06 PROVIDE PG&E APPROVED SIGNS ON DOORS STATING THAT THE ROOM CONTAINS FLAMMABLE GAS.

07 PROVIDE SIGNS MOUNTED ON AT LEAST TWO WALLS STATING " NO SMOKING - NO OPEN FLAMES- NO SOURCES OF IGNITION".

08 LOCK BOX , ACCEPTABLE TO PG&E, CONTAINING A DOOR KEY TO THE GAS METER ROOM DOOR

1 A1 GAS METER ROOM CONSTR. PLAN
SCALE: 1/4" = 1'-0"

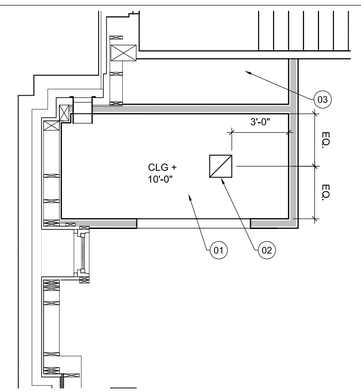


## RCP KEY NOTES

01 (N) 2 LAYERS OF 5/8" TYPE X GYP BD. CEILING - SEE ELEVATION NOTES FOR FULL RATED ASSEMBLY

02 EXHAUST FAN, S.M.D.

03 EXPOSED FRAMING - NON RATED

2 A1 GAS METER ROOM CONSTR. PLAN
SCALE: 1/4" = 1'-0"


Michael Tauber Architecture
2325 Third Street, Ste 322
San Francisco, CA 94107
p. 415.252.7044

Creegan+D'Angelo INFRASTRUCTURE ENGINEERS
170 Columbus Ave., Suite 240
San Francisco, CA 94133
Tel (415) 834-2010
Fax (415) 834-2011
www.cdengineers.com


LICENSED ARCHITECT MICHAEL TAUBER C-25947 12/31/13 Renewal Date STATE OF CALIFORNIA

## ELEV AND SECTION KEY NOTES

01 CENTER GRILLE AS CLOSE TO CENTER OF WALL AS POSSIBLE. BOTTOM OF FLANGE OF LOUVER TO ALIGN WITH TOP OF PLASTER BASE

02 CONCRETE BASE/STEM WALL, S.S.D.

03 2 HOUR RATED FLOOR CEILING ASSEMBLY:(UL #L511) - MIN. 19/32" WOOD STRUCTURAL PANELS , MIN. GRADE " UNDERLAYMENT" OVER MIN. 15/32" STRUCTURAL PANELS "SHEATHING" OVER 2 X 10 @ 16" O.C. W/ 2 X 10 SOLID BLOCKING BRIDGING OVER RESILIENT CHANNELS FASTENED WITH 1-7/8"LONG NO. 7TYPE S BUNGLE HEAD SCREWS @24" O.C.W/ ADDITIONAL CHANNELS 60" LONG , PLACED ADJACENT TO CONT. CHANNELS AT TH END JOINTS OF SECOND LAYERS OF GYP. BD. AND SIMILARLY SECURED OVER TWO LAYERS OF 5/8" TYPE C (USG) SYP. BD.

04 TYP. 2 HOUR WALL ASSEMBLY

05 LOCK BOX, SEE PLAN

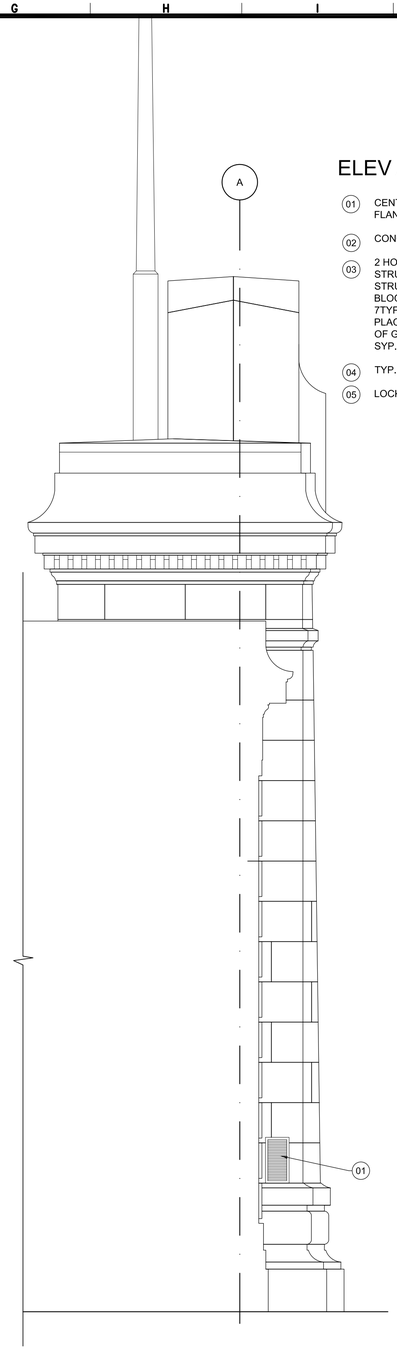


3 A1 PARTIAL EXTERIOR ELEVATION
SCALE: 1/4" = 1'-0"

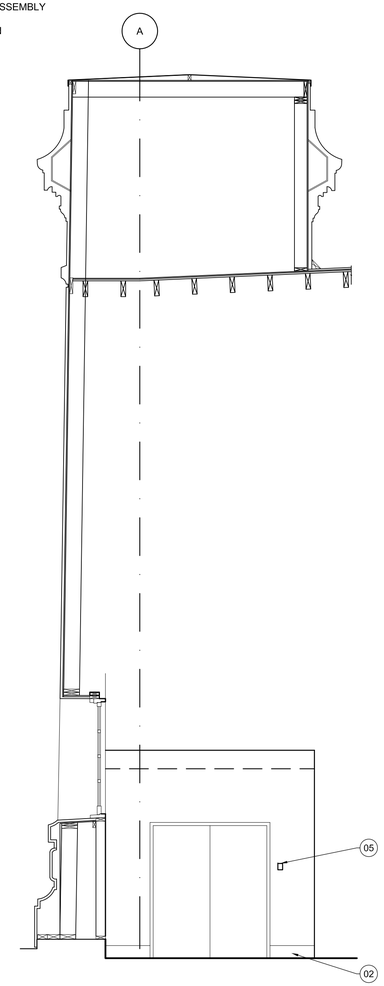


4 A1 PARTIAL INTERIOR ELEVATION
SCALE: 1/4" = 1'-0"

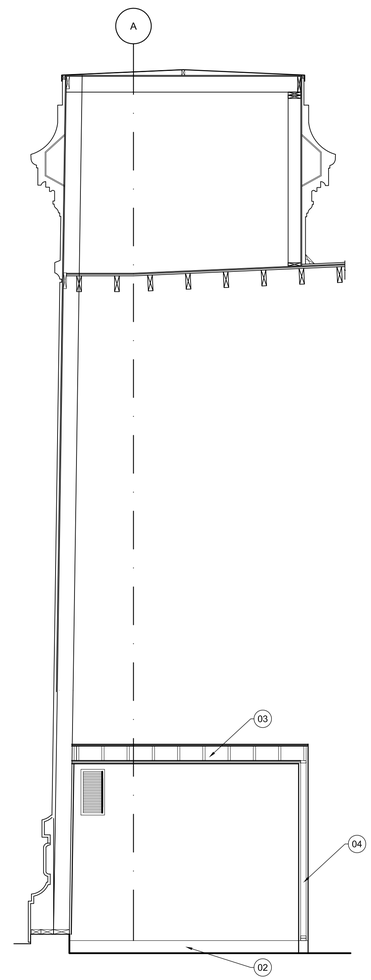


5 A1 SECTION THROUGH GAS ROOM
SCALE: 1/4" = 1'-0"

| NO. | DATE | DESCRIPTION | BY | APP. |
|---|---|---|---|---|

TABLE OF REVISIONS
CHECK WITH TRACING TO SEE IF YOU HAVE LATEST REVISION

REFERENCE INFORMATION & FILE NO. OF SURVEYS

SAN FRANCISCO PORT COMMISSION
PORT OF SAN FRANCISCO
DEPARTMENT OF ENGINEERING

| | |
|---|---|
| DESIGNED: MT | DATE: |
| DRAWN: JG/MT | DATE: |
| CHECKED: MT | DATE: 1/25/13 |

APPROVED BY SAN FRANCISCO PORT COMMISSION
DATE: _____
CHIEF HARBOR ENGINEER

SCALE: AS NOTED
SHEET OF SHEETS

PIER 29
GAS METER REPLACEMENT

CONSTRUCTION, RCP, INTERIOR ELEVATIONS AND SECTIONS

CONTRACT NO.
DRAWING NO. A1.0
FILE NO. XXXX-29-S
REV. NO.

VIEW: PLOT1

Creegan+D'Angelo
INFRASTRUCTURE ENGINEERS
170 Columbus Ave., Suite 240
San Francisco, CA 94133
Tel (415) 834-2010
Fax (415) 834-2011
www.cdengineers.com

REGISTERED PROFESSIONAL ENGINEER
DEAN R. SEDLACHEK
NO. C74932
EXP. 12/31/13
CIVIL
STATE OF CALIFORNIA

## STRUCTURAL DESIGN CRITERIA

PROJECT DESCRIPTION
REPLACE GAS METER ROOM DAMAGED BY FIRE.

LIMITATIONS
THE STRUCTURAL DESIGN OF THE BUILDING COMPONENTS DESCRIBED IN THESE DRAWINGS IS BASED ON THE 2010 PORT OF SAN FRANCISCO BUILDING CODE WITH THE FOLLOWING LIMITATIONS:

1. DESIGN BASIS FOR STRUCTURAL

DESIGN LOADS

LIVE LOAD, CEILING.....20 PSF
DEAD LOAD, CEILING.....20 PSF
MECHANICAL EQUIPMENT (EXHAUST FANS, EACH).....50 LBS

GENERAL

1. CONTRACTOR SHALL VERIFY ALL DIMENSIONS, ELEVATIONS, AND CONDITIONS OF THE SITE AND EXISTING CONDITIONS PRIOR TO COMMENCING CONSTRUCTION. IF THERE ARE ANY DISCREPANCIES BETWEEN THE EXISTING CONDITIONS AND THESE DRAWINGS AND SPECIFICATIONS, THE CONTRACTOR SHALL NOTIFY THE OWNER IMMEDIATELY IN WRITING. IN NO CASE SHALL DIMENSIONS BE SCALED FROM PLANS, SECTIONS OR DETAILS ON THESE DRAWINGS.

ALL CONSTRUCTION SHALL BE IN ACCORDANCE WITH THE 2010 PORT OF SAN FRANCISCO BUILDING CODE.

2. ALL OMISSIONS AND CONFLICTS BETWEEN THE VARIOUS ELEMENTS OF THE WORKING DRAWINGS AND/OR SPECIFICATIONS SHALL BE BROUGHT TO THE ATTENTION OF THE ENGINEER BEFORE PROCEEDING WITH ANY WORK SO INVOLVED.

3. THE CONTRACTOR SHALL LOCATE AND PROTECT ALL EXISTING UTILITY LINES AND CONNECTIONS INCLUDING SEWER, WATER, GAS, AND ELECTRIC SERVICES BEFORE AND DURING HIS WORK.

4. WHERE A CONSTRUCTION DETAIL IS NOT SHOWN OR NOTED, THE DETAIL SHALL BE THE SAME AS FOR OTHER SIMILAR WORK.

5. NO PIPES, DUCTS, SLEEVES, CHASES, ETC., SHALL BE PLACED IN SLABS, BEAMS, OR WALLS UNLESS SPECIFICALLY SHOWN OR NOTED, NOR SHALL ANY STRUCTURAL MEMBER BE CUT FOR PIPES, DUCTS, ETC., UNLESS OTHERWISE NOTED. CONTRACTOR SHALL OBTAIN PRIOR APPROVAL FOR INSTALLATION OF ANY ADDITIONAL PIPES, DUCTS, ETC.

6. CONTRACTOR SHALL TAKE PRECAUTIONARY MEASURES TO ENSURE THAT ALL PROPERTY IS PROTECTED DURING THIS OPERATION. ANY DAMAGE OR CHANGED CONDITIONS SHALL BE REPAIRED AND RESTORED TO A CONDITION EQUAL TO THAT EXISTING AT THE COMMENCEMENT OF THE WORK. CONTRACTOR SHALL RESTORE ANY DAMAGE AT HIS OWN EXPENSE.

7. SUBMIT REQUESTS FOR MODIFICATIONS TO THE CONTRACT DOCUMENTS IN WRITING. SHOP DRAWINGS SUBMITTED FOR REVIEW DO NOT CONSTITUTE "REQUEST IN WRITING" UNLESS IT IS CLEARLY NOTED THAT SPECIFIC CHANGES ARE BEING REQUESTED.

8. DISCOVERY AND MANAGEMENT OF HAZARDOUS MATERIALS IN EXISTING CONSTRUCTION IS THE RESPONSIBILITY OF THE CONTRACTOR. THE DESIGNER HAS NOT PERFORMED INVESTIGATIONS TO DETERMINE THE PRESENCE OF HAZARDOUS MATERIALS. IF HAZARDOUS MATERIALS ARE DISCOVERED, THE CONTRACTOR SHALL IMMEDIATELY NOTIFY THE OWNER AND CEASE WORK UNTIL CONDITIONS CAN BE MAINTAINED IN COMPLIANCE WITH ALL APPLICABLE REGULATIONS. THE CONTRACTOR IS RESPONSIBLE FOR ENSURING THAT PERSONNEL WITHIN THE WORK AREA ARE PROTETED FROM EXPOSURE TO HAZARDOUS MATERIALS.

## EXISTING UTILITIES

1. THE CONTRACTOR SHALL NOTIFY THE PORT PRIOR TO REPLACING ANY UTILITY THAT IS NOT IN KIND OR IN PLACE.

2. THE CONTRACTOR SHALL PROVIDE AS-BUILT DRAWINGS TO THE PORT FOR ALL UTILITIES REPLACED AND/OR MODIFIED IN THE PROJECT.

## SPECIAL INSPECTIONS

1. IN ADDITION TO THE INSPECTIONS REQUIRED BY CBC SECTION 108, A "SPECIAL" INSPECTOR, EMPLOYED BY THE OWNER, SHALL OBSERVE THE WORK LISTED BELOW FOR CONFORMANCE WITH THESE PLANS AND SPECIFICATIONS. SPECIAL INSPECTIONS SHALL BE "CONTINUOUS" UNLESS NOTED AS "PERIODIC".

2. THE SPECIAL INSPECTOR SHALL BE APPROVED BY THE BUILDING OFFICIAL AND QUALIFIED TO PERFORM INSPECTIONS OF THE PARTICULAR TYPE OF CONSTRUCTION OR OPERATION.

3. THE SPECIAL INSPECTOR SHALL FURNISH INSPECTION REPORTS TO THE BUILDING OFFICIAL, ENGINEER, ARCHITECT, AND OWNER. ALL WORK IN NON-CONFORMANCE WITH THE PLANS AND SPECIFICATIONS SHALL BE BROUGHT TO THE IMMEDIATE ATTENTION OF THE CONTRACTOR FOR CORRECTION; THEN, IF UNCORRECTED, TO THE OWNER AND BUILDING OFFICIAL.

4. THE SPECIAL INSPECTOR SHALL SUBMIT A FINAL SIGNED REPORT STATING WHETHER THE WORK REQUIRING SPECIAL INSPECTIONS WAS, TO THE BEST OF HIS KNOWLEDGE, IN CONFORMANCE WITH THE APPROVED PLANS AND SPECIFICATIONS AND THE APPLICABLE WORKMANSHIP PROVISIONS OF THE CBC.

5. THE FOLLOWING WORK REQUIRES SPECIAL INSPECTION IN ACCORDANCE WITH CHAPTER 17 OF THE CBC:

CONCRETE: DURING THE TAKING OF TEST SPECIMENS AND PLACING OF ALL CONCRETE.

CONCRETE FORMWORK: SHAPE, LOCATION AND DIMENSIONS OF THE CONCRETE MEMBER BEING FORMED SHALL BE PERIODICALLY INSPECTED.

EPOXIED DOWELS IN CONCRETE: THE SPECIAL INSPECTOR SHALL PROVIDE CONTINUOUS INSPECTION DURING DRILLING AND PREPARATION OF HOLES AND INSTALLATION OF EPOXIED DOWELS.

REINFORCING STEEL: THE SPECIAL INSPECTOR SHALL INSPECT ALL REINFORCEMENT IN-PLACE FOR CONFORMANCE WITH THE APPROVED PLANS PRIOR TO CLOSING OF FORMS OR DELIVERY OF CONCRETE TO THE JOBSITE.

## TESTING

1. ALL TESTING SHALL BE PERFORMED BY AN APPROVED TESTING LABORATORY, EMPLOYED BY THE OWNER AND SHALL BE DONE IN ACCORDANCE WITH APPLICABLE PROVISIONS OF THE CALIFORNIA BUILDING CODE AND INDICATED PROVISIONS OF THE CBC STANDARDS AND ASTM STANDARDS. COSTS OF REQUIRED RETESTING SHALL BE PAID FOR BY THE CONTRACTOR.

2. TEST REPORTS SHALL BE FURNISHED TO THE BUILDING DEPARTMENT, OWNER, ARCHITECT, AND ENGINEER FOR ALL TESTING. TEST RESULTS NOT IN CONFORMANCE WITH THE PLANS AND SPECIFICATIONS SHALL BE BROUGHT TO THE IMMEDIATE ATTENTION OF THE OWNER AND CLEARLY IDENTIFIED IN THE TEST REPORTS.

3. THE FOLLOWING WORK REQUIRES TESTING:

CONCRETE: THREE COMPRESSION CYLINDERS PER DAY PER 100 C.Y. TEST ONE CYLINDER AT 7 DAYS, ONE AT 28 DAYS, AND KEEP ONE AS SPARE.

EPOXIED DOWELS IN CONCRETE: IF THE SPECIAL INSPECTOR HAS BEEN PRESENT DURING THE PREPARATION AND INSTALLATION OF EPOXY DOWELS, NO PULL TESTING IS REQUIRED.

## STRUCTURAL OBSERVATIONS

STRUCTURAL OBSERVATIONS, AS REQUIRED BY SECTION 1709, WILL BE UNDERTAKEN BY PERSONNEL UNDER THE SUPERVISION OF THE ENGINEER OF RECORD. STRUCTURAL OBSERVATIONS ARE SEPARATE FROM THE SPECIAL INSPECTIONS OUTLINED ABOVE.

THE PURPOSE OF THE STRUCTURAL OBSERVATIONS IS TO REVIEW THE OVERALL PROGRESS OF THE CONSTRUCTION AND ASCERTAIN ITS GENERAL COMPLIANCE WITH THE CONSTRUCTION DOCUMENTS, THESE GENERAL NOTES, AND OTHER SPECIFICATIONS WHERE APPLICABLE. OBSERVATIONS WILL BE NOTED IN REGULAR SITE REPORTS ISSUED TO, AT A MINIMUM, THE OWNER, GENERAL CONTRACTOR, AND BUILDING OFFICIAL.

UNLESS OTHERWISE AGREED UPON, THE ENGINEER OF RECORD WILL BE ENGAGED TO PROVIDE, AT A MINIMUM, A LEVEL OF CONSTRUCTION INVOLVEMENT NEEDED TO OBSERVE THE FOLLOWING CONSTRUCTION MILESTONES DURING THE CONSTRUCTION PROCESS:

- CONSTRUCTION OF WOOD-FRAMED WALLS, CEILINGS AND HARDWARE

THE CONTRACTOR SHALL NOTIFY THE ENGINEER A MINIMUM OF 2 DAYS PRIOR TO TIME OF OBSERVATION.

## CAST-IN-PLACE CONCRETE

MATERIALS:

1. CEMENT SHALL CONFORM TO ASTM C 150, TYPE I OR TYPE II.

2. AGGREGATES FOR NORMAL WEIGHT CONCRETE SHALL CONFORM TO ASTM C 33. MAXIMUM SIZE OF AGGREGATE SHALL BE ¾".

3. AGGREGATES FOR LIGHTWEIGHT CONCRETE SHALL CONFORM TO ASTM C 330.

4. READY-MIX CONCRETE SHALL BE MIXED AND DELIVERED IN ACCORDANCE WITH ASTM C 94. SUBMIT AND OBTAIN APPROVAL OF ALL MIX DESIGNS PRIOR TO PLACING CONCRETE.

5. CONCRETE MIXES SHALL HAVE THE FOLLOWING PROPERTIES:

| APPLICATION | DESIGN STRENGTH (1) | CEMENT CONTENT (2) | MAX. AGG. (3) | W/C RATIO (4) | MAX. SLUMP (5) |
|---|---|---|---|---|---|
| SLABS, CURBS, SIDEWALKS | 4,000 | 585 | ¾" | 0.45 | 3 |

NOTES: (1)MINIMUM 28 DAY COMPRESSIVE STRENGTH, PSI; (2)MINIMUM CEMENT CONTENT IN POUNDS PER CUBIC YARD OF CONCRETE; (3)MAXIMUM COARSE AGGREGATE SIZE IN INCHES; (4)MAXIMUM WATER-CEMENT RATIO; (5)SLUMP INCHES.

6. ADMIXTURES SHALL COMPLY WITH ASTM C 494 AND BE OF A TYPE THAT INCREASES THE WORKABILITY OF THE CONCRETE BUT SHALL NOT BE CONSIDERED TO REDUCE THE SPECIFIED MINIMUM CEMENT CONTENT. (CALCIUM CHLORIDE SHALL NOT BE USED.)

7. BAR REINFORCEMENT SHALL BE ASTM A615, GRADE 60, UNLESS OTHERWISE NOTED.

EXECUTION:

1. CONCRETE WORK SHALL CONFORM TO REQUIREMENTS OF ACI 304 – "RECOMMENDED PRACTICE FOR MEASURING, MIXING, TRANSPORTING, AND PLACING CONCRETE".

2. REFER TO STRUCTURAL DRAWINGS AND DRAWINGS OF OTHER DISCIPLINES FOR MOLDS, GROOVES, ORNAMENTS, CLIPS, ANCHORS, INSERTS, OR GROUNDS REQUIRED TO BE CAST INTO CONCRETE.

3. NO CONDUIT PLACED IN A CONCRETE SLAB SHALL HAVE AN OUTSIDE DIAMETER GREATER THAN 1/3 THE THICKNESS OF THE SLAB. NO CONDUIT SHALL BE EMBEDDED IN A SLAB THAT IS LESS THAN 5" THICK. EXCEPT FOR LOCAL OFFSETS, MIN. CLEAR DISTANCE BETWEEN CONDUITS SHALL BE 6".

4. NO CONDUIT SHALL BE PLACED IN THE CONCRETE TOPPING OVER THE STEEL DECKING WITHOUT PRIOR APPROVAL OF THE ENGINEER.

5. PROJECTING CORNERS OF SLABS, BEAMS, WALLS, COLUMNS, ETC., SHALL BE FORMED WITH A 3/4" CHAMFER UNLESS OTHERWISE NOTED.

6. DESIGN AND CONSTRUCTION OF FORMWORK SHALL BE THE RESPONSIBILITY OF THE CONTRACTOR AND SHALL BE PERFORMED IN ACCORDANCE WITH ACI 347- "RECOMMENDED PRACTICE FOR CONCRETE FORMWORK".

7. FORMS MAY BE REMOVED WHEN FIELD-CURED CYLINDERS ACHIEVE 75% OF THE SPECIFIED 28-DAY STRENGTH, BUT NOT SOONER THAN THE TIMES INDICATED IN ACI 347. IT SHALL BE THE RESPONSIBILITY OF THE CONTRACTOR TO MAKE AND PAY FOR THE COSTS OF ANY SUPPLEMENTAL STRENGTH TESTS.

8. UNLESS OTHERWISE NOTED, CONCRETE FLOORS SHALL BE SCREEDED TO AN EVEN PLANE, FLOATED, AND STEEL-TROWELED TO A SMOOTH FINISH. PROVIDE JOINTS AS SHOWN ON THE DRAWINGS.

9. ALL CONCRETE SHALL BE THOROUGHLY COMPACTED BY A MECHANICAL VIBRATOR DURING THE OPERATION OF PLACING AND SHALL BE THOROUGHLY WORKED AROUND REINFORCEMENT AND EMBEDDED FIXTURES AND INTO CORNERS OF FORMS.

## STRUCTURAL WOOD

MATERIALS:

1. FRAMING LUMBER SHALL BE DOUGLAS FIR-LARCH (UON), GRADE STAMPED BY A RECOGNIZED GRADING AGENCY (W.C.L.I.B. OR W.W.P.A.). FURNISH THE FOLLOWING UNLESS OTHERWISE NOTED:

A) FOR HORIZONTAL MEMBERS:
JOISTS & RAFTERS.....GRADE #2 OR BETTER
LEDGERS AND HEADERS.....GRADE #1 OR BETTER

B) FOR VERTICAL MEMBERS:
2x STUDS TO 8'-0" LONG.....STUD GRADE
2x STUDS 8'-1" TO 14"-0".....GRADE #2
OTHER STUDS.....GRADE #2

2. STRUCTURAL NAILS SHALL BE COMMON WIRE TYPE (UON).

3. ALL FRAMING HARDWARE AND CONNECTORS SHALL BE AS MANUFACTURED BY SIMPSON STRONG-TIE COMPANY, INC. OR APPROVED EQUAL. PROVIDE ALL FASTENERS AND ANCHORAGES WITH A HOT-DIP ZINC COATING, UNLESS OTHERWISE NOTED. INSTALLATION SHALL CONFORM TO MANUFACTURERS RECOMMENDATIONS. WHEN FASTENERS ARE IN CONTACT WITH PRESSURE-TREATED WOOD, THE CONTRACTOR SHALL OBTAIN FROM THE MANUFACTURER THE SPECIFIC TYPE OF WOOD TREATMENT AND CHEMICAL RETENTION LEVELS BEING USED. SUBMIT THE CHEMICAL TREATMENT CERTIFICATION DATA TO THE ENGINEER. BASED UPON THIS INFORMATION, THE ENGINEER SHALL DETERMINE WHETHER HOT-DIPPED GALVANIZED OR STAINLESS STEEL CONNECTORS SHOULD BE USED. IN THE ABSENCE OF SUCH INFORMATION, STAINLESS STEEL CONNECTORS SHOULD BE USED.

4. ALL HARDWARE AND FASTENERS SHALL BE HOT-DIP GALVANIZED OR 304 STAINLESS STEEL.

5. HOT-DIP GALVANIZED HARDWARE SHALL CONFORM TO ASTM A123

6. HOT-DIP GALVANIZED FASTENERS SHALL CONFORM TO ASTM A153

7. PRESSURE TREATED WOOD SHALL BE USED FOR SILLS, FOUNDATION PLATES AND SLEEPERS, AND ALL WOOD IN CONTACT WITH CONCRETE OR MASONRY.

8. CONVENTIONAL FRAMING CONNECTIONS SHALL BE IN ACCORDANCE WITH TABLE 2304.9.1 OF THE 2010 CBC.

| NO. | DATE | DESCRIPTION | BY | APP. |
|---|---|---|---|---|
| 0 | 1/24/13 | PERMIT SUBMITTAL | DS | RL |

TABLE OF REVISIONS
CHECK WITH TRACING TO SEE IF YOU HAVE LATEST REVISION

REFERENCE INFORMATION & FILE NO. OF SURVEYS

PORT OF SAN FRANCISCO

SAN FRANCISCO PORT COMMISSION
PORT OF SAN FRANCISCO
DEPARTMENT OF ENGINEERING

DESIGNED: DS DATE: 1/24/13
DRAWN: C+D DATE: 1/24/13
CHECKED: DS DATE: 1/24/13

APPROVED BY SAN FRANCISCO PORT COMMISSION
DATE: _____
CHIEF HARBOR ENGINEER

SCALE: AS NOTED
SHEET OF SHEETS

PIER 29
GAS METER REPLACEMENT

GENERAL NOTES

CONTRACT NO.
DRAWING NO. S1.0
FILE NO.
REV. NO.

Creegan+D'Angelo
INFRASTRUCTURE ENGINEERS
170 Columbus Ave., Suite 240
San Francisco, CA 94133
Tel (415) 834-2010
Fax (415) 834-2011
www.cdengineers.com

REGISTERED PROFESSIONAL ENGINEER
DEAN R. SEDLACHEK
NO. C74932
EXP. 12/31/13
CIVIL
STATE OF CALIFORNIA

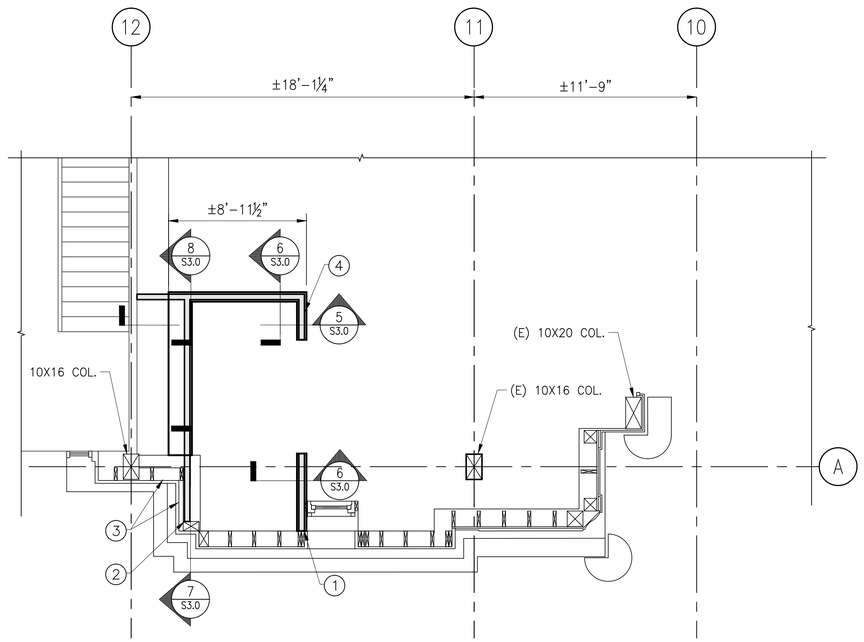


NORTH

PARTIAL FLOOR PLAN 1
1/4" = 1'-0"
CADDFILE

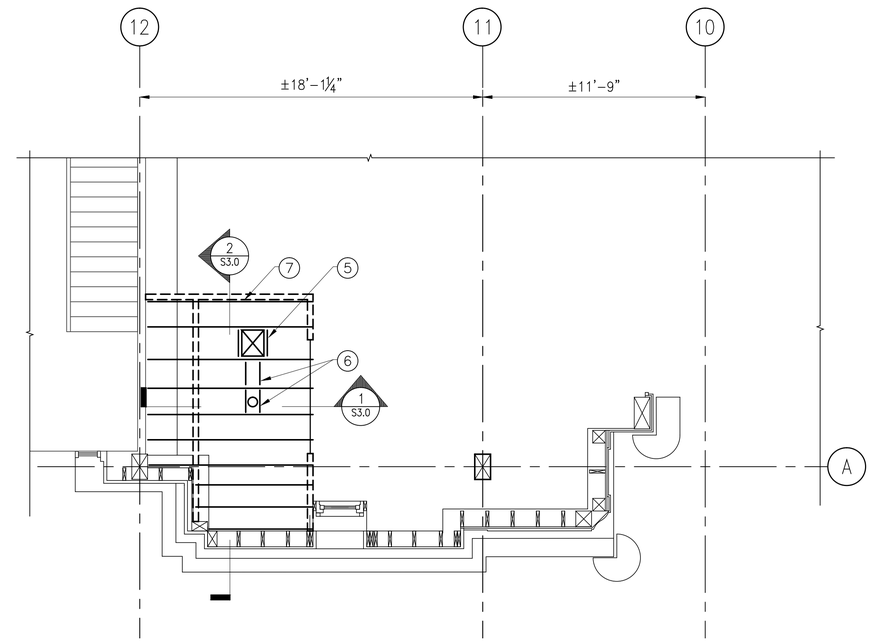


NORTH

PARTIAL ROOF PLAN 2
3/8" = 1'-0"
CADDFILE

## LEGEND

1. INDICATES (N) CONC. STEM WALL FOOTING
2. INDICATES (E) STUD WALL
3. INDICATES (N) 2X4 @ 16" O.C. STUD WALL
4. INDICATES (N) 2X4 STUD WALL BELOW
5. INDICATES 2X10 @ 16" O.C. JOIST

## KEY NOTES

1. ALIGN (N) STUD WITH F.O.S. ON EXISTING WINDOW FRAMING, S.A.D.
2. ALIGN (N) STUD WITH F.O. (E) SHEATHING, S.A.D.
3. (N) WALL PENETRATION, SEE DETAIL 3/S3.0
4. WALL SHEATHING: TWO-PLY 5/8" GYPSUM BOARD EA. FACE OF STUD. S.A.D FOR ADD'L DETAILS
   BASE PLY FASTENERS: 6d COOLER NAILS @ 9" O.C.
   FACE PLY FASTENERS: 8d COOLER NAILS @ 7" O.C.
5. 2X6 BLOCKING AROUND EXHAUST FAN OPENING, SEE MECHANICAL DRAWINGS
6. 2X6 BLOCKING FOR DUCT SUPPORTS, SEE MECHANICAL DRAWINGS
7. ROOF SHEATHING: 15/32" APA-RATED PLYWOOD SHEATHING
   BOUNDRY NAIL 8d @ 6" O.C.
   FIELD NAIL 8d @ 6" O.C.
   BLOCK ALL UNSUPPORTED PANEL EDGES W/ FULL SIZE BLOCKS

## PLAN NOTES

1. DIMENSIONS SHOWN ARE BASED ON AS-BUILT DRAWINGS PROVIDED BY THE PORT OF SAN FRANCISCO.
2. THE CONTRACTOR SHALL VERIFY ALL EXISTING CONDITIONS AND PROPOSED DIMENSIONS AT THE JOB SITE BEFORE PROCEEDING WITH ANY WORK. COMPARE STRUCTURAL DRAWINGS WITH ARCHITECTURAL, MECAHNICAL AND ELECTRICAL DRAWINGS. NOTIFY ENGINEER OF ANY DISCREPANCIES AND DO NOT PROCEED WITH AFFECTED WORK UNTIL THEY ARE RESOLVED.

| NO. | DATE | DESCRIPTION | BY | APP. |
|---|---|---|---|---|
| 0 | 1/24/13 | PERMIT SUBMITTAL | DS | RL |

TABLE OF REVISIONS
CHECK WITH TRACING TO SEE IF YOU HAVE LATEST REVISION

REFERENCE INFORMATION & FILE NO. OF SURVEYS

PORT OF SAN FRANCISCO

SAN FRANCISCO PORT COMMISSION
PORT OF SAN FRANCISCO
DEPARTMENT OF ENGINEERING

DESIGNED: DS DATE: 1/24/13
DRAWN: C+D DATE: 1/24/13
CHECKED: DS DATE: 1/24/13

APPROVED BY SAN FRANCISCO PORT COMMISSION
DATE: _____
CHIEF HARBOR ENGINEER

SCALE: AS NOTED
SHEET OF SHEETS

PIER 29
GAS METER REPLACEMENT

STRUCTURAL PLANS

CONTRACT NO.
DRAWING NO. S2.0
FILE NO.
REV. NO.

Creegan+D'Angelo
INFRASTRUCTURE ENGINEERS
170 Columbus Ave., Suite 240
San Francisco, CA 94133
Tel (415) 834-2010
Fax (415) 834-2011
www.cdengineers.com

PROFESSIONAL ENGINEER
REGISTERED
DEAN R. SEDLACHEK
NO. C74932
EXP. 12/31/13
CIVIL
STATE OF CALIFORNIA

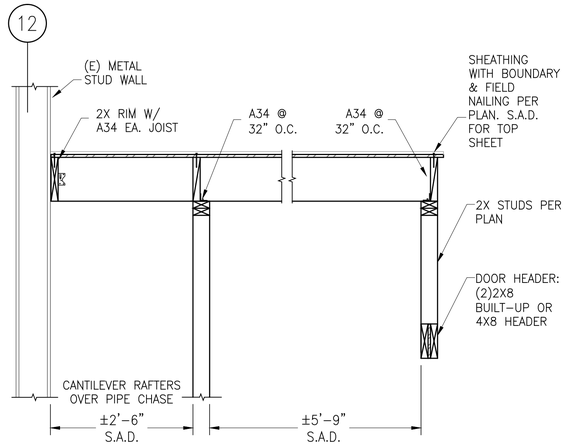


ROOF DETAIL TRANSVERSE 1
3/4"=1'-0"
STEM WALL DET 1_16

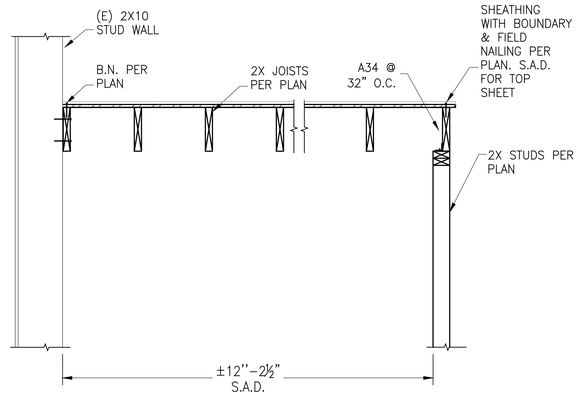


ROOF DETAIL LONGITUDINAL 2
3/4"=1'-0"
STEM WALL DET 1_16

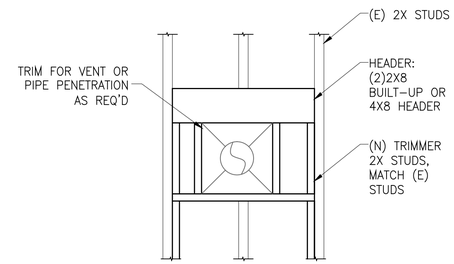


WALL PENETRATION TYPICAL DETAIL 3
3/4"=1'-0"
STEM WALL DET 1_16

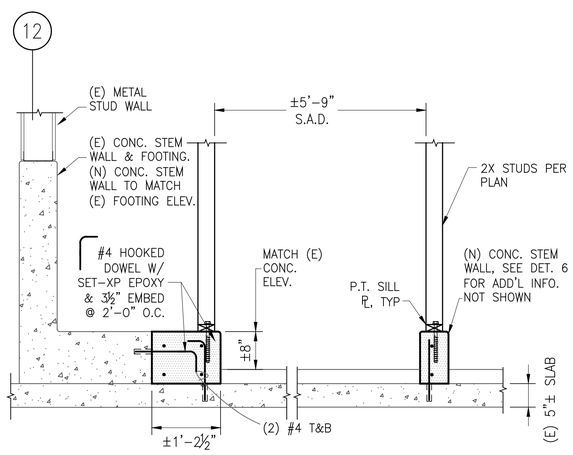


STEM WALL DETAIL 5
3/4"=1'-0"
STEM WALL DET 1_16

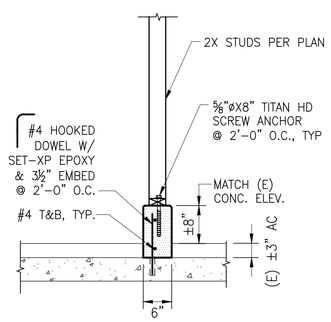


STEM WALL DETAIL 6
3/4"=1'-0"
STEM WALL DET 1_16

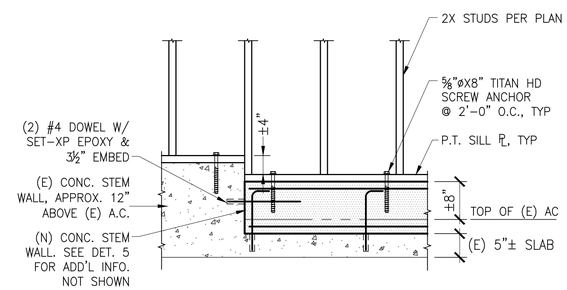


STEM WALL DETAIL 7
3/4"=1'-0"
STEM WALL DET 1_16

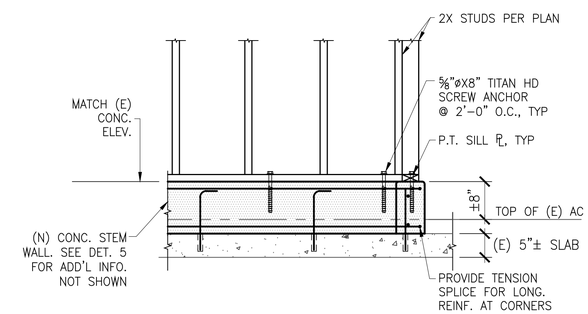


STEM WALL DETAIL 8
3/4"=1'-0"
STEM WALL DET 1_16

| NO. | DATE | DESCRIPTION | BY | APP. |
|---|---|---|---|---|
| 0 | 1/24/13 | PERMIT SUBMITTAL | DS | RL |

TABLE OF REVISIONS
CHECK WITH TRACING TO SEE IF YOU HAVE LATEST REVISION

REFERENCE INFORMATION & FILE NO. OF SURVEYS

PORT OF SAN FRANCISCO

SAN FRANCISCO PORT COMMISSION
PORT OF SAN FRANCISCO
DEPARTMENT OF ENGINEERING

DESIGNED: DS DATE: 1/24/13
DRAWN: C+D DATE: 1/24/13
CHECKED: DS DATE: 1/24/13

APPROVED BY SAN FRANCISCO PORT COMMISSION
DATE: _____
CHIEF HARBOR ENGINEER

SCALE: AS NOTED
SHEET OF SHEETS

PIER 29
GAS METER REPLACEMENT

STRUCTURAL DETAILS

CONTRACT NO.
DRAWING NO. S3.0
FILE NO.
REV. NO.

# GENERAL NOTES

1. THE ELECTRICAL DRAWINGS ARE DIAGRAMMATIC AND DO NOT SHOW ALL OFFSETS, BENDS, FITTINGS, JUNCTION BOXES, PULL BOXES AND EXPANSION FITTINGS. DETERMINE ACTUAL MATERIAL AND HARDWARE REQUIREMENTS AND VERIFY ALL DIMENSIONS AND EXISTING EQUIPMENT AND STRUCTURAL MEMBER LOCATIONS BY FIELD VERIFICATION.
2. VERIFY EXISTING SITE CONDITIONS, REQUIREMENTS AND EXACT LOCATIONS OF UTILITIES.
3. ALL WIRING TO BE DEMOLISHED SHALL BE REMOVED BACK TO RESPECTIVE PANEL.
4. VERIFY ALL EXISTING CONDITIONS IN THE FIELD PRIOR TO PURCHASING EQUIPMENT. ADVISE THE PORT IN WRITING IN THE EVENT A CONFLICT OCCURS BETWEEN THE REQUIREMENTS OF THE CONTRACT DOCUMENTS AND ACTUAL FIELD CONDITIONS. THE CONTRACTOR SHALL BEAR ALL COSTS FOR RELOCATION OF EQUIPMENT, PIPING CONDUIT, WIRING ETC., FROM FAILURE TO PROPERLY COORDINATE INSTALLATIONS AND ADVISE OF THE CONFLICT IN WRITING PRIOR TO INSTALLATION.
5. IN CASE OF DIFFERENCE BETWEEN BUILDING CODES, SPECIFICATIONS, INDUSTRY STANDARDS, UTILITY COMPANY REGULATIONS, FIRE INSURANCE CARRIER'S REQUIREMENTS AND CONTRACT DOCUMENTS, THE MOST STRINGENT SHALL GOVERN. PROMPTLY NOTIFY THE PORT IN WRITING OF ANY SUCH DIFFERENCE.
6. PLANS ARE BASED ON ANTICIPATED EQUIPMENT SIZE AND CONFIGURATION. CONTRACTOR SHALL MODIFY ARRANGEMENT TO SUIT ACTUAL PURCHASED EQUIPMENT AS REQUIRED FOLLOWING THE CRITERIA ESTABLISHED BY THESE PLANS. DEPARTURES FROM THE CONTRACT DRAWING RESULTING FROM CHANGES IN EQUIPMENT SIZES AND CONFIGURATIONS, OR RE–ARRANGEMENTS TO ACCOMMODATE FIELD CONDITIONS SHALL BE SUBMITTED IN DETAIL FOR PORT'S APPROVAL.
7. CONTRACTOR SHALL BE RESPONSIBLE FOR PROTECTION AND SHALL REPAIR ADJACENT EXISTING AND/OR NEW SURFACES, AREAS AND PROPERTY THAT MAY BE DAMAGED AS A RESULT OF ANY DEMOLITION AND/OR NEW WORK.
8. EQUIPMENT OF HIGHER ELECTRICAL CHARACTERISTICS MAY BE FURNISHED PROVIDED SUCH PROPOSED EQUIPMENT IS APPROVED IN WRITING AND CONNECTING ELECTRICAL SERVICES, CIRCUIT BREAKERS, AND CONDUIT SIZES ARE APPROPRIATELY MODIFIED WITHOUT COST TO THE PORT. IF MINIMUM ENERGY RATINGS OR EFFICIENCIES ARE SPECIFIED, EQUIPMENT SHALL COMPLY WITH REQUIREMENTS.
9. CONTRACTOR IS TO MAINTAIN RECORDED "AS–BUILT" INFORMATION ON ALL EXISTING SERVICES UNCOVERED DURING CONSTRUCTION AND ALL NEW SERVICES BEING INSTALLED. "AS–BUILT" INFORMATION SHALL BE CLEARLY MARKED IN COLORED PENCIL ON A PRINT OF THE CONTRACT DRAWING. RECORDED INFORMATION SHALL INCLUDE ROUTING AND INVERT ELEVATIONS. AT THE COMPLETION OF THE CONTRACT, THE CONTRACTOR SHALL TURN RECORDED "AS–BUILT" INFORMATION OVER TO THE PORT AND CONTRACTOR TO BE COORDINATED WITH AS BUILT REQUIREMENTS IN SPECIFICATION.
10. CONTRACTOR SHALL BE RESPONSIBLE FOR THE COMPLETE OPERATIONAL AND FUNCTIONALITY OF THE ELECTRICAL SYSTEM AS INDICATED ON DRAWING AND SPECIFICATION.
11. CONTRACTOR SHALL BE RESPONSIBLE FOR PROVIDING MISCELLANEOUS METAL AND SUPPORTS FOR THE PROPER INSTALLATION OF THE CONDUIT SUPPORT TO THE BUILDING STRUCTURE.
12. CONTRACTOR SHALL REMOVE, RELOCATE, REPLACE WITH NEW AND/OR RECONNECT ALL EXISTING SERVICES AS REQUIRED BY NEW CONSTRUCTION.
13. NOT ALL EXISTING ELECTRICAL SYSTEMS ARE SHOWN. CONTRACTOR SHALL BE RESPONSIBLE FOR FIELD VERIFICATION OF EXISTING FIELD CONDITIONS.
14. ALL EXPOSED CONDUITS SHALL RUN PARALLEL OR PERPENDICULAR TO (E) BEAMS OR TRUSSES. CONDUITS, BOXES & FITTINGS SHALL BE PAINTED TO MATCH (E) SURFACES.

# ABBREVIATIONS

| ABBREV. | DESCRIPTION | ABBREV. | DESCRIPTION |
|---|---|---|---|
| A, AMP | AMPERES | MIN | MINIMUM |
| AFF | ABOVE FINISH FLOOR | MFR | MANUFACTURER |
| AF | AMP FRAM | (N) | NEW |
| AT | AMP TRIP | NA | NOT APPLICABLE |
| | | NIC | NOT IN CONTRACT |
| CKT | CIRCUIT | NTS | NOT TO SCALE |
| CU | COPPER | | |
| | | P | POLE |
| DISC | DISCONNECT | PH, ø | PHASE |
| DWG | DRAWING | PNL | PANEL |
| | | PT | PRESS TREATED |
| EA | EACH | | |
| ELEC | ELECTRICAL | SS | STAINLESS STEEL |
| (E) | EXISTING | SW | SWITCH |
| | | TX | TRANSFORMER |
| (F) | FUTURE | TYP | TYPICAL |
| | | UON | UNLESS OTHERWISE NOTED |
| GFI | GROUND FAULT INTERRUPTER | | |
| GND | GROUND | | |
| | | V | VOLT |
| GRS | GALVANIZE RIGID STEEL | VA | VOLT–AMPERES |
| | | | |
| JB | JUNCTION BOX | W | WIRE, WATT |
| | | WPC | WEATHER PROOF COVER |
| KV | KILOVOLTS | | |
| KVA | KILOVOLT–AMPERES | XFMR | TRANSFORMER |

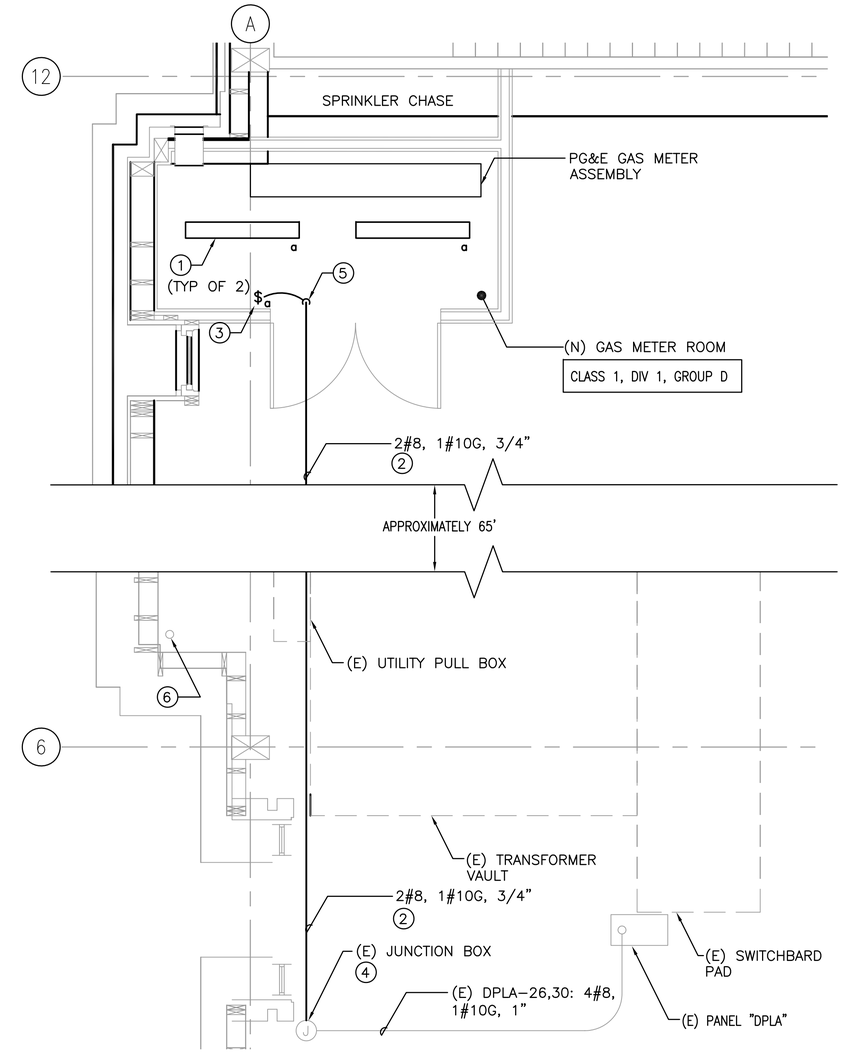


PIER 29 GAS METER ROOM LIGHTING NEW WORK ENLARGED PLAN

SCALE: 3/8"=1'–0"

1 / E1.1

# ELECTRICAL LEGEND

| SYMBOL | DESCRIPTION |
|---|---|
| $a | LIGHT SWITCH<br>a = SUBSCRIPT INDICATES CIRCUIT |
| | EXPLOSION PROOF LIGHT FIXTURE |
| a | SWITCH CONTROL LETTER |
| J | JUNCTION BOX |
| | RACEWAY ROUTED AWAY FROM VIEWER |
| | RACEWAY ROUTED TOWARD VIEWER |


Creegan+D'Angelo INFRASTRUCTURE ENGINEERS
170 Columbus Ave., Suite 240
San Francisco, CA 94133
Tel (415) 834-2010
Fax (415) 834-2011
www.cdengineers.com

YEI ENGINEERS, INC.
7700 Edgewater Drive, Suite 128, Oakland, CA 94621
Phone: (510) 383-1050 Fax: (510) 383-1057


REGISTERED PROFESSIONAL ENGINEER GEORGE WK CHEUNG No. E 14107 EXP. 6/30/13 ELECTRICAL STATE OF CALIFORNIA

## SHEET NOTES:

1. UPDATE PANEL SCHEDULE.
2. ALL ROUTING SHALL BE INTERIOR. NO EXTERIOR CONDUIT ROUTING IS ACCEPTABLE.
3. PROVIDE ADDITIONAL JUNCTION BOXES AS NECESSARY PER NEC.

## KEY NOTES:

1. FIXTURE TYPE – APPLETON–EFU FLUORESCENT FACTORY SEALED LUMINAIRES, ARS232–BU OR APPROVED EQUAL. TWO T8 LAMP, 120V, RAPID START ELECTRONIC BALLAST, EXPLOSION PROOF SURFACE MOUNTED FIXTURE.
2. PROVIDE RACEWAY SUPPORTS PER NEC.
3. PROVIDE EXPLOSION PROOF LIGHT SWITCH RATED FOR CLASS, DIVISION, AND GROUP INDICATED.
4. USE (E) BULKHEAD LIGHTING CIRCUIT 30 FROM PANEL "DPLA" IN (E) JUNCTION BOX AND EXTEND TO (N) LIGHT FIXTURES. USE CIRCUIT NOT CONTROLLED BY PHOTOCELL.
5. PROVIDE GALVANIZED STEEL CONDUITS AND EXPLOSION PROOF EQUIPMENT PER NEC CLASS AND DIVISION AT LOCATIONS NOTED WITH CALL OUT:

   CLASS 1, DIV 1, GROUP D

   PROVIDE CONDUIT SEAL AT UNIONS, COUPLINGS, BOXES OR ENCLOSURES, AND WITHIN 10 FEET OF EITHER SIDE OF BOUNDARY POINT WHERE THE CONDUIT LEAVES THE CLASSIFIED LOCATION.
6. ROUGH–IN (E) 2" FIBER OPTIC CONDUIT FLUSH TO GROUND WITH PULL ROPE. PROVIDE PLUG TO PROTECTED CONDUIT FROM DEBRIS AND DIRT FROM FALLING IN.

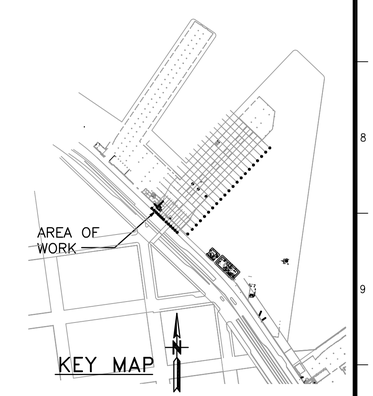


| NO. | DATE | DESCRIPTION | BY | APP. |
|---|---|---|---|---|
| | | | | |

TABLE OF REVISIONS
CHECK WITH TRACING TO SEE IF YOU HAVE LATEST REVISION

REFERENCE INFORMATION & FILE NO. OF SURVEYS

SAN FRANCISCO PORT COMMISSION
PORT OF SAN FRANCISCO
DEPARTMENT OF ENGINEERING

DESIGNED: BY DATE: 01/14/13
DRAWN: PW DATE: 01/14/13
CHECKED: GC DATE: 01/14/13

APPROVED BY SAN FRANCISCO PORT COMMISSION
DATE: _____
CHIEF HARBOR ENGINEER

SCALE: AS SHOWN
SHEET OF SHEETS _ OF _

PIER 29
GAS METER REPLACEMENT

ELECTRICAL LEGEND, ABBREVIATIONS, & LIGHTING NEW WORK ENLARGED PLAN

CONTRACT NO.
DRAWING NO. E1.1
FILE NO. XXXX–29–S
REV. NO.

VIEW: PLOT1

# GENERAL NOTES

1. CONTRACTOR SHALL BE RESPONSIBLE FOR FINAL VERIFICATION AND COORDINATION OF EXISTING CONDITIONS AND ALL OTHER TRADES. VERIFY ALL EXISTING CONDITIONS IN THE FIELD PRIOR TO PURCHASING EQUIPMENT. ADVISE THE PORT IN WRITING IN THE EVENT A CONFLICT OCCURS BETWEEN THE REQUIREMENTS OF THE CONTRACT DOCUMENTS AND ACTUAL FIELD CONDITIONS. THE CONTRACTOR SHALL BEAR ALL COSTS FOR RELOCATION OF EQUIPMENT, DUCTWORK, PIPING, ETC., FROM FAILURE TO PROPERLY COORDINATE INSTALLATIONS AND ADVISE OF THE CONFLICT IN WRITING PRIOR TO INSTALLATION.
2. IN CASE OF DIFFERENCE BETWEEN BUILDING CODES, SPECIFICATIONS, INDUSTRY STANDARDS, UTILITY COMPANY REGULATIONS, FIRE INSURANCE CARRIER'S REQUIREMENTS AND CONTRACT DOCUMENTS, THE MOST STRINGENT SHALL GOVERN. PROMPTLY NOTIFY THE PORT IN WRITING OF ANY SUCH DIFFERENCE.
3. DUCTWORK AS SHOWN ON DRAWINGS ARE SCHEMATIC AND SHALL BE FABRICATED AND INSTALLED ON ACTUAL FIELD MEASUREMENT. DO NOT SCALE DRAWINGS FOR EXACT LOCATION OF DUCTWORK. COORDINATE WITH OTHER TRADES AS REQUIRED.
4. PLANS ARE BASED ON ANTICIPATED EQUIPMENT SIZE AND CONFIGURATION. CONTRACTOR SHALL MODIFY ARRANGEMENT TO SUIT ACTUAL PURCHASED EQUIPMENT AS REQUIRED FOLLOWING THE CRITERIA ESTABLISHED BY THESE PLANS. DEPARTURES FROM THE CONTRACT DRAWING RESULTING FROM CHANGES IN EQUIPMENT SIZES AND CONFIGURATIONS, OR RE–ARRANGEMENTS TO ACCOMMODATE FIELD CONDITIONS SHALL BE SUBMITTED IN DETAIL FOR PORT'S APPROVAL.
5. CONTRACTOR SHALL BE RESPONSIBLE FOR PROTECTION AND SHALL REPAIR ADJACENT EXISTING AND/OR NEW SURFACES, AREAS AND PROPERTY THAT MAY BE DAMAGED AS A RESULT OF ANY DEMOLITION AND/OR NEW WORK.
6. CONFORM TO LATEST NFPA 90A "STANDARD FOR THE INSTALLATION OF AIR CONDITIONING AND VENTILATION SYSTEMS".
7. ALL EQUIPMENT AND DUCTWORK AND ITS INSTALLATION SHALL BE IN ACCORDANCE WITH MANUFACTURERS' INSTRUCTION. PROVIDE EQUIPMENT CLEARANCES IN ACCORDANCE WITH THE MANUFACTURER'S RECOMMENDATIONS AND INSTRUCTIONS.
8. DUCT SIZES SHOWN ARE MINIMUM INSIDE DIMENSION.
9. EXACT LOCATION OF GRILLES, DIFFUSERS, REGISTERS AND ACCESS PANELS SHALL BE COORDINATED WITH THE ARCHITECTURAL REFLECTED CEILING PLAN.
10. PROVIDE READILY VISIBLE NON–FUSIBLE DISCONNECT SWITCHES FOR ALL NEW EQUIPMENT. COORDINATE WITH OTHER TRADES.
11. ALL MECHANICAL EQUIPMENT SHALL BE BRACED OR ANCHORED TO RESIST A HORIZONTAL FORCE ACTING IN ANY DIRECTION USING THE FOLLOWING CRITERIA: THE TOTAL DESIGN LATERAL SEISMIC FORCE SHALL BE DETERMINED FROM CBC 1613A. FORCES SHALL BE APPLIED IN THE HORIZONTAL DIRECTIONS THAT WILL RESULT IN THE MOST CRITICAL LOADING FOR DESIGN. WHERE ANCHORAGE DETAILS AND LOCATIONS ARE NOT SPECIFICALLY SHOWN ON THE PLANS, THE FIELD INSTALLATION SHALL BE SUBJECT TO REVIEW AND APPROVAL OF THE MECHANICAL ENGINEER OF RECORD. SUPPORTS FOR ALL DUCTWORK SHALL BE IN ACCORDANCE WITH LATEST SMACNA GUIDELINES FOR SEISMIC RESTRAINTS OF MECHANICAL SYSTEMS AND PIPING SYSTEMS AND MSS SP–58 AND SP–69.
12. CONTRACTOR SHALL BE RESPONSIBLE FOR THE COMPLETE FUNCTIONALITY OF THE EQUIPMENT INCLUDING ELECTRICAL AND CONTROL ITEMS ASSOCIATED WITH THE PROJECT.
13. CONTRACTOR IS TO MAINTAIN RECORDED "AS–BUILT" INFORMATION ON ALL EXISTING SERVICES UNCOVERED DURING CONSTRUCTION AND ALL NEW SERVICES BEING INSTALLED. "AS–BUILT" INFORMATION SHALL BE CLEARLY MARKED IN COLORED PENCIL ON A PRINT OF THE CONTRACT DRAWING. RECORDED INFORMATION SHALL INCLUDE ROUTING AND INVERT ELEVATIONS. AT THE COMPLETION OF THE CONTRACT, THE CONTRACTOR SHALL TURN RECORDED "AS–BUILT" INFORMATION OVER TO THE PORT AND CONTRACTOR TO BE COORDINATED WITH AS BUILT REQUIREMENTS IN SPECIFICATION.
14. ALL WORK SHALL BE PERFORMED IN ACCORDANCE WITH THE LATEST EDITION OF THE CALIFORNIA PLUMBING CODE, CALIFORNIA MECHANICAL CODE, CALIFORNIA BUILDING CODE AND LATEST CITY ADOPTED.
15. SEQUENCE WORK TO AVOID CUTTING AND PATCHING. IF NECESSARY, REMOVE AND REPAIR WALL/CEILING FOR ACCESS TO WORK ON THE MECHANICAL SYSTEMS (SEE ARCHITECTURAL PLANS AND SPECIFICATIONS). PATCH AND FINISH TO MATCH ADJACENT SURFACE.
16. VERIFY AT PROJECT SITE EXACT SIZE, LOCATION, INVERT ELEVATION, AND CLEARANCE OF ALL EXISTING SERVICES BEING EXTENDED, RELOCATED, OR REMOVED PRIOR TO INSTALLATION OF NEW BRANCH SERVICES.
17. HANGERS SHALL BE DESIGNED TO SUPPORT THE WEIGHT OF THE DUCTWORK AND THE WEIGHT OF THE CONTENTS OF THE DUCTWORK.
18. PROVIDE A HANGER NOT MORE THAN 12" FROM THE POINT OF CHANGE OF DIRECTION OF DUCT RUN IN BOTH HORIZONTAL AND VERTICAL PLANE.

# DESIGN CRITERIA

PIER 29

DEMOLITION WORK:

1. EXISTING GAS METERS AND ASSOCIATED APPURTENANCES INCLUDING BUT NOT LIMITED TO PIPING AND SUPPORTS TO BE REMOVED BY PG & E.
2. REMOVE EXISTING GAS SERVICE LINE AND ASSOCIATED APPURTENANCES SERVING PIER 29 1/2 TWO STORY OFFICE BUILDING GAS EQUIPMENT.

NEW WORK:

1. NEW GAS METER ASSEMBLY AND ASSOCIATED APPURTENANCES FURNISHED AND INSTALLED BY PG&E INCLUDING BUT NOT LIMITED TO GAS METERS, PRESSURE REGULATORS, GAS FILTERS, AND SUPPORTS FOR A COMPLETE AND FULLY FUNCTIONAL SYSTEM SIZED FOR THREE GAS METERS (600 CFH EACH). ONE GAS METER SHALL BE INSTALLED FOR PIER 29–1/2 WITH A HEADER LINE FOR TWO STUB–OUTS FOR FUTURE GAS METER INSTALLATIONS TO SERVE PIERS 29 AND 31.
2. INSTALL NEW EXPLOSION PROOF INLINE EXHAUST FAN AND ASSOCIATED APPURTENANCES INCLUDING BUT NOT LIMITED TO POWER, CONTROL AND SUPPORTS.
3. INSTALL NEW EXTERIOR FRESH AIR INTAKE WALL LOUVER, EXHAUST DUCT STACK AND ASSOCIATED APPURTENANCES.
4. INSTALL NEW LOW PRESSURE GAS LINE AND ASSOCIATED APPURTENANCES INCLUDING BUT NOT LIMITED TO SUPPORTS AND FITTINGS FOR PIER 29 1/2 TWO STORY OFFICE BUILDING GAS APPLIANCES.

# MECHANICAL ABBREVIATIONS

| ABBREV. | DESCRIPTION |
|---|---|
| AFF | ABOVE FINISHED FLOOR |
| BF | BELOW FLOOR |
| CBC | CALIFORNIA BUILDING CODE |
| CFM | CUBIC FEET PER MINUTE |
| CMC | CALIFORNIA MECHANICAL CODE |
| (E) | EXISTING |
| ESP | EXTERNAL STATIC PRESSURE |
| FPM | FEET PER MINUTE |
| HP | HORSE POWER |
| HZ | HERTZ |
| IN. W.G. | INCH WATER GAUGE |
| MSS | MANUFACTURERS STANDARDIZATION SOCIETY |
| MSS SP–58 | PIPE HANGERS AND SUPPORTS– MATERIALS, DESIGN AND MANUFACTURE |
| MSS SP–69 | PIPE HANGERS AND SUPPORTS– SELECTION AND APPLICATION |
| (N) | NEW |
| NC | NOISE CRITERION |
| NFPA | NATIONAL FIRE PROTECTION ASSOCIATION |
| PG&E | PACIFIC GAS AND ELECTRIC COMPANY |
| PH | PHASE |
| RPM | REVOLUTIONS PER MINUTE |
| SMACNA | SHEET METAL AND AIR CONDITIONING CONTRACTORS NATIONAL ASSOCIATION |
| SP | STATIC PRESSURE |
| SQ | SQUARE |
| VTR | VENT THROUGH ROOF |


Creegan+D'Angelo INFRASTRUCTURE ENGINEERS
170 Columbus Ave., Suite 240
San Francisco, CA 94133
Tel (415) 834-2010
Fax (415) 834-2011
www.cdengineers.com

YEI ENGINEERS, INC.
7700 Edgewater Drive, Suite 128, Oakland, CA 94621
Phone: (510) 383-1050 Fax: (510) 383-1057


REGISTERED PROFESSIONAL ENGINEER PATRICK R. MALLIN NO. 34258 EXP. 06/30/13 MECHANICAL STATE OF CALIFORNIA

# MECHANICAL LEGEND

| SYMBOL | ABBREV. | DESCRIPTION |
|---|---|---|
| | POC | POINT OF CONNECTION |
| | POD | POINT OF DEMOLITION |
| HPG | HPG | HIGH PRESSURE GAS |
| LPG | LPG | LOW PRESSURE GAS |
| | | ELBOW DOWN |
| | | ELBOW UP |
| | | TEE DOWN |
| | | TEE UP |
| | | ELBOW DOWN WITH VALVE |
| | | BALL VALVE |
| | CL | CAPPED LINE |
| FD | FD | FIRE DAMPER |
| | | UNION |
| | EAG | EXHAUST AIR GRILLE |
| | | MECHANICAL EQUIPMENT TAG |
| 1 / M1.1 M3.1 | | SECTION OR DETAIL LETTER/NUMBER<br>TO THE SHEET THE SECTION/DETAIL IS ON<br>WHERE THE SECTION/DETAIL WAS TAKEN FROM |

| NO. | DATE | DESCRIPTION | BY | APP. |
|---|---|---|---|---|

TABLE OF REVISIONS
CHECK WITH TRACING TO SEE IF YOU HAVE LATEST REVISION

REFERENCE INFORMATION & FILE NO. OF SURVEYS

SAN FRANCISCO PORT COMMISSION
PORT OF SAN FRANCISCO
DEPARTMENT OF ENGINEERING

DESIGNED: AK DATE: 1/18/13
DRAWN: RH DATE: 1/18/13
CHECKED: PM DATE: 1/18/13

APPROVED BY SAN FRANCISCO PORT COMMISSION
DATE: _____
CHIEF HARBOR ENGINEER

SCALE: NONE
SHEET OF SHEETS _ OF _

PIER 29
GAS METER REPLACEMENT
MECHANICAL
ABBREVIATIONS, LEGEND AND GENERAL NOTES

CONTRACT NO.
DRAWING NO. M0.1
FILE NO. XXXX–29–S
REV. NO.

VIEW: PLOT1

Creegan+D'Angelo
INFRASTRUCTURE ENGINEERS
170 Columbus Ave., Suite 240
San Francisco, CA 94133
Tel (415) 834-2010
Fax (415) 834-2011
www.cdengineers.com

YEI ENGINEERS, INC.
7700 Edgewater Drive, Suite 128, Oakland, CA 94621
Phone: (510) 383-1050 Fax: (510) 383-1057

REGISTERED PROFESSIONAL ENGINEER
PATRICK R. MALLIN
No. 34358
Exp. 06/30/13
MECHANICAL
STATE OF CALIFORNIA

# MECHANICAL VENTILATION FAN SCHEDULE

| EQUIP. NUMBER | BUILDING / LOCATION | AREA SERVED | FAN TYPE | AIR FLOW RATE | TOTAL E.S.P. | FAN RPM | DRIVE TYPE | MOTOR RATING | ELECTRICAL CHARACTERISTICS | OPERATING WEIGHT | MAXIMUM RADIATED SOUND LEVEL | REMARKS | MANUFACTURER |
|---|---|---|---|---|---|---|---|---|---|---|---|---|---|
| | | | | CFM | IN. W.G. | | | HP | VOLT/PH/HZ | LBS. | Dba | | |
| EF 1 | PIER 29 | GAS METER ROOM | INLINE EXHAUST FAN | 260 | 0.50 | 1911 | BELT | 1/4 | 115/1/60 | 190 | 70 | SEE NOTES BELOW | COOK MODEL 70 SQN-B OR APPROVED EQUAL |

NOTES:
1. PROVIDE BACKDRAFT DAMPER.
2. PROVIDE TEFC CLASS 1, DIV 1 & GROUP D EXPLOSION PROOF MOTOR WITH SPARK RESISTANT TYPE A CONSTRUCTION.
3. PROVIDE OSHA MOTOR COVER, BELT TENSIONER AND INSULATED HOUSING.
4. FAN SHALL OPERATE CONTINUOUSLY.
5. PROVIDE PHENOLIC EPOXY POWDER COATING.

# AIR OUTLET SCHEDULE

| SYMBOL | TYPE | THROW TYPE | AIR FLOW RANGE | SIZE | NECK SIZE | REMARKS | MANUFACTURER |
|---|---|---|---|---|---|---|---|
| | | | CFM | INCHES | INCHES | | |
| A1 | EXHAUST AIR GRILLE | FIXED 35° DEFLECTION WITH 3/4" HORIZONTAL FRONT BLADE SPACING | 0-300 | 12X12 | – | SEE NOTES BELOW. | KRUEGER MODEL S80 OR APPROVED EQUAL. |

NOTES:
1. MAX. FPM 400.
2. MAX. NOISE LEVEL NC 30.
3. MAX. STATIC PRESSURE 0.06.

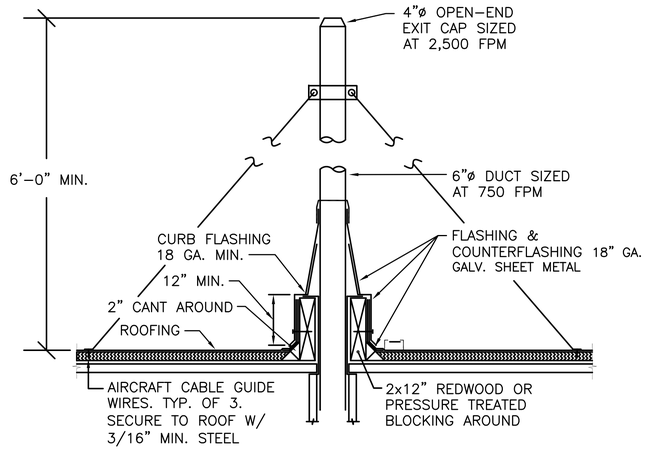


DETAIL NOTES:
1. CONSTRUCTION ASSEMBLY SHALL BE GALV. STEEL PER CMC CHAPTER 5 TABLE 5-5 OR 5-6. WELDED CONSTRUCTION.
2. SEE ARCHITECTURAL DRAWINGS FOR DUCT FLASHING.
3. FOLLOW CMC CHAPTER 5 SECTION 506.9.1 FOR EXHAUST OUTLET TERMINATION.

EXHAUST DUCT STACK (1 / M0.2)
NTS

IDENTIFICATION FOR PLUMBING AND EQUIPMENT

1.1 EQUIPMENT LABELS

A. METAL LABELS FOR EQUIPMENT:
1. MATERIAL AND THICKNESS: STAINLESS STEEL, 0.025-INCH MINIMUM THICKNESS, AND HAVING PREDRILLED OR STAMPED HOLES FOR ATTACHMENT HARDWARE.
2. MINIMUM LABEL SIZE: LENGTH AND WIDTH VARY FOR REQUIRED LABEL CONTENT, BUT NOT LESS THAN 2-1/2 BY 3/4 INCH.
3. MINIMUM LETTER SIZE: 1/4 INCH FOR NAME OF UNITS IF VIEWING DISTANCE IS LESS THAN 24 INCHES, 1/2 INCH FOR VIEWING DISTANCES UP TO 72 INCHES, AND PROPORTIONATELY LARGER LETTERING FOR GREATER VIEWING DISTANCES. INCLUDE SECONDARY LETTERING TWO-THIRDS TO THREE-FOURTHS THE SIZE OF PRINCIPAL LETTERING.
4. FASTENERS: STAINLESS-STEEL RIVETS OR SELF-TAPPING SCREWS.

B. LABEL CONTENT: INCLUDE EQUIPMENT'S DRAWING DESIGNATION OR UNIQUE EQUIPMENT NUMBER, DRAWING NUMBERS WHERE EQUIPMENT IS INDICATED (PLANS, DETAILS, AND SCHEDULES), PLUS THE TITLE WHERE EQUIPMENT IS SPECIFIED.

C. INSTALL OR PERMANENTLY FASTEN LABELS ON EACH MAJOR ITEM OF MECHANICAL EQUIPMENT. LOCATE EQUIPMENT LABELS WHERE ACCESSIBLE AND VISIBLE.

1.2 DUCT LABELS

A. MATERIAL AND THICKNESS: MULTILAYER, MULTICOLOR, PLASTIC LABELS FOR MECHANICAL ENGRAVING, 1/8 INCH THICK, AND HAVING PREDRILLED HOLES FOR ATTACHMENT HARDWARE.

B. LETTER COLOR: WHITE . BACKGROUND COLOR: BLACK

C. MAXIMUM TEMPERATURE: ABLE TO WITHSTAND TEMPERATURES UP TO 160 DEG F.

D. MINIMUM LABEL SIZE: LENGTH AND WIDTH VARY FOR REQUIRED LABEL CONTENT, BUT NOT LESS THAN 2-1/2 BY 3/4 INCH.

E. MINIMUM LETTER SIZE: 1/4 INCH FOR NAME OF UNITS IF VIEWING DISTANCE IS LESS THAN 24 INCHES, 1/2 INCH FOR VIEWING DISTANCES UP TO 72 INCHES, AND PROPORTIONATELY LARGER LETTERING FOR GREATER VIEWING DISTANCES. INCLUDE SECONDARY LETTERING TWO-THIRDS TO THREE-FOURTHS THE SIZE OF PRINCIPAL LETTERING.

F. FASTENERS: STAINLESS-STEEL RIVETS OR SELF-TAPPING SCREWS.

G. DUCT LABEL CONTENTS: INCLUDE IDENTIFICATION OF DUCT SERVICE USING SAME DESIGNATIONS OR ABBREVIATIONS AS USED ON DRAWINGS, DUCT SIZE, AND AN ARROW INDICATING FLOW DIRECTION.
1. FLOW-DIRECTION ARROWS: INTEGRAL WITH DUCT SYSTEM SERVICE LETTERING TO ACCOMMODATE BOTH DIRECTIONS, OR AS SEPARATE UNIT ON EACH DUCT LABEL TO INDICATE FLOW DIRECTION.
2. LETTERING SIZE: AT LEAST 1-1/2 INCHES HIGH.

1.3 VALVE TAGS

A. VALVE TAGS: STAMPED OR ENGRAVED WITH 1/4-INCH LETTERS FOR PIPING SYSTEM ABBREVIATION AND 1/2-INCH NUMBERS.
1. TAG MATERIAL: STAINLESS STEEL, 0.025-INCH MINIMUM THICKNESS, AND HAVING PREDRILLED OR STAMPED HOLES FOR ATTACHMENT HARDWARE.
2. FASTENERS: BRASS WIRE-LINK OR BEADED CHAIN; OR S-HOOK.

B. INSTALL TAGS ON VALVES AND CONTROL DEVICES IN PIPING SYSTEMS, EXCEPT CHECK VALVES; VALVES WITHIN FACTORY-FABRICATED EQUIPMENT UNITS; AND SHUTOFF VALVES.
1. VALVE-TAG SIZE AND SHAPE: GAS: 1-1/2 INCHES ROUND.

C. VALVE-TAG COLOR: GAS: NATURAL. LETTER COLOR: GAS: BLACK

| NO. | DATE | DESCRIPTION | BY | APP. |
|---|---|---|---|---|

TABLE OF REVISIONS
CHECK WITH TRACING TO SEE IF YOU HAVE LATEST REVISION

REFERENCE INFORMATION & FILE NO. OF SURVEYS

SAN FRANCISCO PORT COMMISSION
PORT OF SAN FRANCISCO
DEPARTMENT OF ENGINEERING

DESIGNED: AK DATE: 1/18/13
DRAWN: RH DATE: 1/18/13
CHECKED: PM DATE: 1/18/13

APPROVED BY SAN FRANCISCO PORT COMMISSION
DATE: _____
CHIEF HARBOR ENGINEER

SCALE: NONE
SHEET OF SHEETS _ OF _

PIER 29
GAS METER REPLACEMENT

MECHANICAL
EQUIPMENT SCHEDULES,
DETAILS AND SPECIFICATIONS

CONTRACT NO.
DRAWING NO. M0.2
FILE NO. XXXX-29-S
REV. NO.

VIEW: PLOT1

GENERAL

1.1 FIELD CONDITIONS

A. INTERRUPTION OF EXISTING WATER AND NATURAL GAS SERVICE: DO NOT INTERRUPT WATER AND NATURAL GAS SERVICE TO FACILITIES OCCUPIED BY THE PORT OR OTHERS UNLESS PERMITTED UNDER THE FOLLOWING CONDITIONS AND THEN ONLY AFTER ARRANGING TO PROVIDE TEMPORARY WATER AND NATURAL GAS SERVICE ACCORDING TO REQUIREMENTS INDICATED:

1. NOTIFY THE PORT NO FEWER THAN TWO DAYS IN ADVANCE OF PROPOSED INTERRUPTION OF WATER SERVICE.
2. DO NOT INTERRUPT WATER AND NATURAL GAS SERVICE WITHOUT THE PORT'S WRITTEN PERMISSION.

ESCUTCHEONS FOR PLUMBING PIPING

1.1 INSTALL ESCUTCHEONS AS FOLLOWS FOR PENETRATIONS OF CEILINGS, FLOORS, AND WALLS.

A. PIPING WITH FITTING OR SLEEVE PROTRUDING FROM WALL: ONE PIECE, DEEP PATTERN.
B. BARE PIPING AT WALL AND FLOOR PENETRATIONS IN FINISHED SPACES: ONE PIECE, CAST BRASS WITH POLISHED CHROME-PLATED FINISH.
C. BARE PIPING AT CEILING PENETRATIONS IN FINISHED SPACES: ONE PIECE, CAST BRASS WITH POLISHED CHROME-PLATED FINISH.

1.2 ESCUTCHEONS

A. ONE PIECE, CAST BRASS: POLISHED, CHROME-PLATED FINISH WITH SETSCREWS.
B. DEEP PATTERN TYPE: DEEP DRAWN, BOX SHAPED WITH CHROME-PLATED FINISH AND SPRING CLIPS.

NATURAL GAS PIPING

1.1 PERFORMANCE REQUIREMENTS

A. NATURAL-GAS SYSTEM PRESSURE WITHIN BUILDINGS: MORE THAN 0.5 PSIG BUT NOT MORE THAN 2 PSIG.

1.2 PIPES, TUBES, AND FITTINGS

B. STEEL PIPE: ASTM A 53/A 53M, BLACK STEEL, SCHEDULE 40, TYPE E OR S, GRADE B.
1. MALLEABLE-IRON THREADED FITTINGS: ASME B16.3, CLASS 150, STANDARD PATTERN.
2. UNIONS: ASME B16.39, CLASS 150, MALLEABLE IRON WITH BRASS-TO-IRON SEAT, GROUND JOINT, AND THREADED ENDS.

1.3 JOINING MATERIALS

A. JOINT COMPOUND AND TAPE: SUITABLE FOR NATURAL GAS.

1.4 MANUAL GAS SHUTOFF VALVES

A. GENERAL REQUIREMENTS FOR METALLIC VALVES, NPS 2 AND SMALLER: COMPLY WITH ASME B16.33.
1. CWP RATING: 125 PSIG
2. THREADED ENDS: COMPLY WITH ASME B1.20.1.
3. TAMPERPROOF FEATURE: LOCKING FEATURE FOR VALVES.
4. LISTING: LISTED AND LABELED BY AN NRTL ACCEPTABLE TO AUTHORITIES HAVING JURISDICTION FOR VALVES 1 INCH AND SMALLER.
5. SERVICE MARK: VALVES 1-1/4 INCHES TO NPS 2 SHALL HAVE INITIALS "WOG" PERMANENTLY MARKED ON VALVE BODY.

B. ONE-PIECE, BRONZE BALL VALVE WITH BRONZE TRIM: MSS SP-110.
1. MANUFACTURERS: SUBJECT TO COMPLIANCE WITH REQUIREMENTS, PROVIDE PRODUCTS BY ONE OF THE FOLLOWING:
a. BRASSCRAFT MANUFACTURING COMPANY; A MASCO COMPANY.
b. CONBRACO INDUSTRIES, INC.; APOLLO DIV.
c. LYALL, R. W. & COMPANY, INC.
d. MCDONALD, A. Y. MFG. CO.
e. PERFECTION CORPORATION; A SUBSIDIARY OF AMERICAN METER COMPANY.
2. BODY: BRONZE, COMPLYING WITH ASTM B 584.
3. BALL: CHROME-PLATED BRASS.
4. STEM: BRONZE; BLOWOUT PROOF.
5. SEATS: REINFORCED TFE; BLOWOUT PROOF.
6. PACKING: SEPARATE PACKNUT WITH ADJUSTABLE-STEM PACKING THREADED ENDS.
7. ENDS: THREADED
8. CWP RATING: 600 PSIG.
9. LISTING: VALVES NPS 1 AND SMALLER SHALL BE LISTED AND LABELED BY AN NRTL ACCEPTABLE TO AUTHORITIES HAVING JURISDICTION.
10. SERVICE: SUITABLE FOR NATURAL-GAS SERVICE WITH "WOG" INDICATED ON VALVE BODY.

1.5 INDOOR PIPING INSTALLATION

A. COMPLY WITH NFPA 54 FOR INSTALLATION AND PURGING OF NATURAL-GAS PIPING.

B. DRIPS AND SEDIMENT TRAPS: INSTALL DRIPS AT POINTS WHERE CONDENSATE MAY COLLECT, INCLUDING SERVICE-METER OUTLETS. LOCATE WHERE ACCESSIBLE TO PERMIT CLEANING AND EMPTYING. DO NOT INSTALL WHERE CONDENSATE IS SUBJECT TO FREEZING.
1. CONSTRUCT DRIPS AND SEDIMENT TRAPS USING TEE FITTING WITH BOTTOM OUTLET PLUGGED OR CAPPED. USE NIPPLE A MINIMUM LENGTH OF 3 PIPE DIAMETERS, BUT NOT LESS THAN 3 INCHES LONG AND SAME SIZE AS CONNECTED PIPE. INSTALL WITH SPACE BELOW BOTTOM OF DRIP TO REMOVE PLUG OR CAP.

C. INSTALL UNIONS IN PIPES NPS 2 AND SMALLER, ADJACENT TO EACH VALVE, AT FINAL CONNECTION TO EACH PIECE OF EQUIPMENT. UNIONS ARE NOT REQUIRED AT FLANGED CONNECTIONS.

1.6 PIPING JOINT CONSTRUCTION

A. REAM ENDS OF PIPES AND TUBES AND REMOVE BURRS.

B. REMOVE SCALE, SLAG, DIRT, AND DEBRIS FROM INSIDE AND OUTSIDE OF PIPE AND FITTINGS BEFORE ASSEMBLY.

C. THREADED JOINTS:
1. THREAD PIPE WITH TAPERED PIPE THREADS COMPLYING WITH ASME B1.20.1.
2. CUT THREADS FULL AND CLEAN USING SHARP DIES.
3. REAM THREADED PIPE ENDS TO REMOVE BURRS AND RESTORE FULL INSIDE DIAMETER OF PIPE.
4. APPLY APPROPRIATE TAPE OR THREAD COMPOUND TO EXTERNAL PIPE THREADS UNLESS DRYSEAL THREADING IS SPECIFIED.
5. DAMAGED THREADS: DO NOT USE PIPE OR PIPE FITTINGS WITH THREADS THAT ARE CORRODED OR DAMAGED. DO NOT USE PIPE SECTIONS THAT HAVE CRACKED OR OPEN WELDS.

1.7 CONNECTIONS

A. INSTALL PIPING ADJACENT TO APPLIANCES TO ALLOW SERVICE AND MAINTENANCE OF APPLIANCES.

B. CONNECT PIPING TO APPLIANCES USING MANUAL GAS SHUTOFF VALVES AND UNIONS. INSTALL VALVE WITHIN 72 INCHES OF EACH GAS-FIRED APPLIANCE AND EQUIPMENT. INSTALL UNION BETWEEN VALVE AND APPLIANCES OR EQUIPMENT.

C. SEDIMENT TRAPS: INSTALL TEE FITTING WITH CAPPED NIPPLE IN BOTTOM TO FORM DRIP, AS CLOSE AS PRACTICAL TO INLET OF EACH APPLIANCE.

1.8 PAINTING

A. PAINT EXPOSED, INTERIOR METAL PIPING, VALVES, SERVICE REGULATORS, SERVICE METERS AND METER BARS, EARTHQUAKE VALVES, AND PIPING SPECIALTIES, EXCEPT COMPONENTS, WITH FACTORY-APPLIED PAINT OR PROTECTIVE COATING.
1. ALKYD SYSTEM: MPI INT 5.1E.
a. PRIME COAT: ALKYD ANTICORROSIVE METAL PRIMER.
b. INTERMEDIATE COAT: INTERIOR ALKYD MATCHING TOPCOAT.
c. TOPCOAT: INTERIOR ALKYD FLAT.
d. COLOR: GRAY.

B. DAMAGE AND TOUCH UP: REPAIR MARRED AND DAMAGED FACTORY-APPLIED FINISHES WITH MATERIALS AND BY PROCEDURES TO MATCH ORIGINAL FACTORY FINISH.

1.9 FIELD QUALITY CONTROL

A. PERFORM TESTS AND INSPECTIONS.

B. TESTS AND INSPECTIONS:
1. TEST, INSPECT, AND PURGE NATURAL GAS ACCORDING TO NFPA 54 AND AUTHORITIES HAVING JURISDICTION.

C. NATURAL-GAS PIPING WILL BE CONSIDERED DEFECTIVE IF IT DOES NOT PASS TESTS AND INSPECTIONS.

D. PREPARE TEST AND INSPECTION REPORTS.

CEILING FIRE DAMPERS

1.1 FABRICATION:

A. FIRE RATING: UL 555C CLASSIFIED AND LABELED AS A 1-1/2 HOUR CEILING DAMPER.

B. AIR FLOW RATING: UL APPROVED FOR DUAL DIRECTIONAL AIR FLOW.

C. FRAME: MINIMUM 20 GAGE GALVANIZED STEEL WITH ROLL FORMED RIDGE FOR BLADE STOP.

D. BLADES:
1. STYLE: TWO-PIECE, SINGLE-THICKNESS WITH BLADE INSULATION, HINGED IN CENTER, AND HELD OPEN WITH FUSIBLE LINK.
2. ACTION: BUTTERFLY.
3. ORIENTATION: HORIZONTAL.
4. MATERIAL: MINIMUM 20 GAGE (0.9MM) GALVANIZED STEEL.
5.

E. HINGE: SPRING STAINLESS STEEL, MECHANICALLY ATTACHED TO BLADES.

F. MOUNTING: HORIZONTAL

G. TEMPERATURE RELEASE DEVICE: FUSIBLE LINK, 165 DEGREES F.

H. FINISH: MILL GALVANIZED.

I. ASSEMBLY: FACTORY ASSEMBLE DAMPER AND ACCESSORIES AND FURNISH AS A SINGLE UNIT CONFORMING TO UL 555C.

SHEET METAL DUCTWORK CONSTRUCTION

1.1 GENERAL:

A. FOLLOW 2010 CMC, CHAPTER 5 SECTION 505.0 FOR PRODUCT CONVEYING DUCTS BASED ON CLASS 1 DIVISION 1 GROUP D HAZARDOUS LOCATION.

B. DUCTS SHALL BE GALVANIZED STEEL WELDED CONSTRUCTION WITH GAGES BASED ON TABLES 5-5 OR 5-6.

DUCT ACCESSORIES

1.1 WALL LOUVERS:

A. MANUFACTURERS: SUBJECT TO COMPLIANCE WITH REQUIREMENTS, PROVIDE PRODUCTS BY ONE OF THE FOLLOWING:

B. BASIS-OF-DESIGN PRODUCT: SUBJECT TO COMPLIANCE WITH REQUIREMENTS, PROVIDE PRODUCT INDICATED ON DRAWINGS OR COMPARABLE PRODUCT BY ONE OF THE FOLLOWING:

1. ARCHITECTURAL LOUVERS
2. RUSKIN COMPANY.
3. APPROVED EQUAL

C. GENERAL: LOUVERS SHALL BE STATIONARY DRAINABLE TYPE WITH MINIMUM 57% FREE AREA BASED ON A 48" HIGH X 48" WIDTH SIZE, AND LOUVER COMPONENTS SHALL BE FACTORY ASSEMBLED BY THE LOUVER MANUFACTURER.

D. TYPE: RATED AND LABELED AMCA CERTIFIED RATINGS SEAL FOR AIR PERFORMANCE & WATER PENETRATION.

E. FRAME: EXTRUDED ALUMINUM WITH 0.081" NOMINAL WALL THICKNESS

F. BLADES: EXTRUDED ALUMINUM WITH 0.081" NOMINAL WALL THICKNESS.

G. BIRDSCREEN: ¾" X 0.051" EXPANDED ALUMINUM IN REMOVABLE FRAME.

1.2 INSTALLATION:

A. INSTALL EQUIPMENT ACCESSORIES OF MATERIALS SUITED TO EQUIPMENT MATERIALS; USE GALVANIZED-STEEL ACCESSORIES IN GALVANIZED-STEEL, STAINLESS-STEEL ACCESSORIES IN STAINLESS-STEEL, AND ALUMINUM ACCESSORIES IN ALUMINUM.

B. INSTALL FIRE DAMPERS ACCORDING TO UL LISTING.

C. INSTALL EQUIPMENT IN ACCORDANCE WITH MANUFACTURER'S INSTRUCTIONS.

D. OPERATE FIRE DAMPERS TO VERIFY FULL RANGE OF MOVEMENT AND VERIFY THAT PROPER HEAT-RESPONSE DEVICE IS INSTALLED.

Creegan+D'Angelo INFRASTRUCTURE ENGINEERS
170 Columbus Ave., Suite 240
San Francisco, CA 94133
Tel (415) 834-2010
Fax (415) 834-2011
www.cdengineers.com

YEI ENGINEERS, INC.
7700 Edgewater Drive, Suite 128, Oakland, CA 94621
Phone: (510) 383-1050 Fax: (510) 383-1057

REGISTERED PROFESSIONAL ENGINEER PATRICK R. MALLILL No. 34258 Exp. 06/30/14 MECHANICAL STATE OF CALIFORNIA

| NO. | DATE | DESCRIPTION | BY | APP. |
|---|---|---|---|---|

TABLE OF REVISIONS
CHECK WITH TRACING TO SEE IF YOU HAVE LATEST REVISION

REFERENCE INFORMATION & FILE NO. OF SURVEYS

PORT OF SAN FRANCISCO

SAN FRANCISCO PORT COMMISSION
PORT OF SAN FRANCISCO
DEPARTMENT OF ENGINEERING

DESIGNED: AK DATE: 1/18/13
DRAWN: RH DATE: 1/18/13
CHECKED: PM DATE: 1/18/13

APPROVED BY SAN FRANCISCO PORT COMMISSION
DATE: _____
CHIEF HARBOR ENGINEER

SCALE: NONE
SHEET OF SHEETS _ OF _

PIER 29
GAS METER REPLACEMENT
MECHANICAL SPECIFICATIONS

CONTRACT NO.
DRAWING NO. M0.3
FILE NO. XXXX-29-S
REV. NO.

VIEW: PLOT1

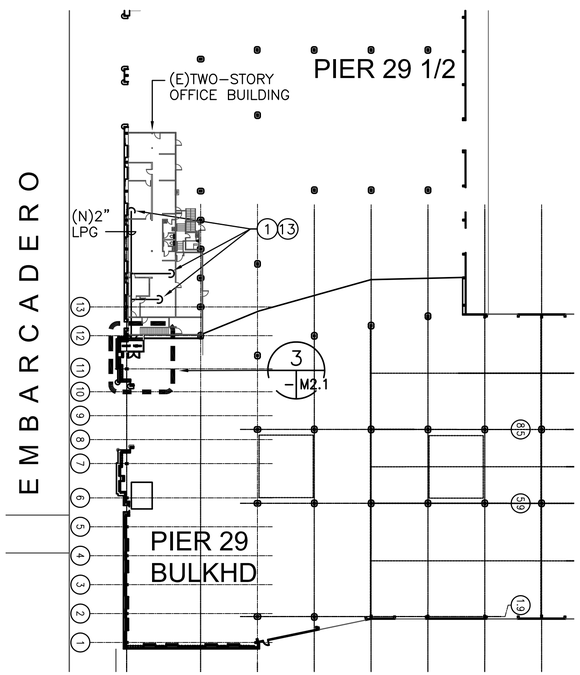


PIER 29 GAS METER ROOM NEW WORK PLAN (2 / M2.1)

SCALE: 1" = 40'-0"

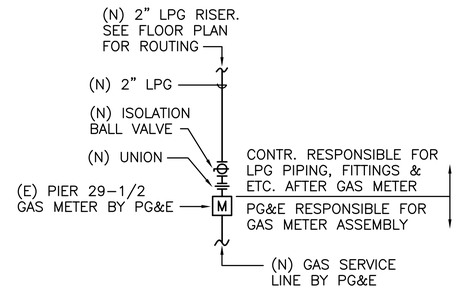


PIERS 29-1/2 PIPING DIAGRAM (4 / M2.1)

NTS

## SHEET NOTES:

1. GAS METER ROOM LOCATION AND PIPING SHALL CONFORM TO ALL CURRENT AND FEDERAL, STATE, AND LOCAL CODES INCLUDING 49 CFR, PART 192, THE NATIONAL FUEL GAS CODE (NFPA 54), AND THE CALIFORNIA PLUMBING CODE.
2. PG&E CLASSIFIES ALL GAS METER ROOMS AS HAZARDOUS LOCATIONS, AND AS SUCH THESE METER ROOMS ARE CLASSIFIED AS CLASS I, DIVISION 1, GROUP D PURSUANT TO NFPA-70, NATIONAL ELECTRIC CODE. MECHANICAL FANS AND ALL OTHER ELECTRICAL DEVICES MUST BE EXPLOSION PROOF AND MEET THE REQUIREMENTS OF THE NFPA-70: NATIONAL ELECTRIC CODE FOR CLASS I, DIVISION 1, GROUP D LOCATIONS.
3. THE CONTRACTOR IS RESPONSIBLE FOR CORE-DRILLING, SEALING, WATERPROOFING, AND MAINTAINING A VAPOR TIGHT SEAL ON ANY WALL, CEILING, OR FLOOR FOR PG&E INSTALL WHERE:
   A. INLET NATURAL GAS PIPING ENTERS THE BUILDING AND/OR THE GAS METER ROOM.
   B. NATURAL GAS REGULATOR RELIEF VENTS EXIT THE GAS METER ROOM AND THE PORT'S BUILDING.
   C. CONDUITS CONTAINING WIRING FOR THE GAS METER (AND APPURTENANCES) ENTERING THE GAS METER ROOM.

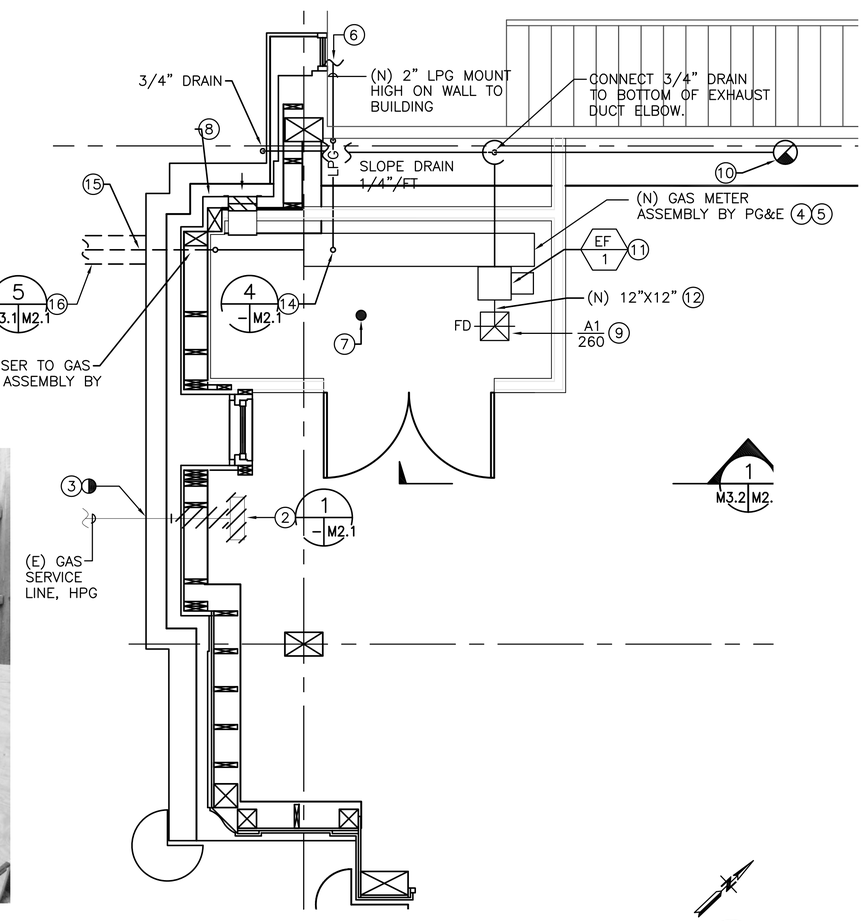


PIER 29 GAS METER ROOM NEW WORK ENLARGED PLAN (3 / M2.1)

SCALE: 3/8"=1'-0"

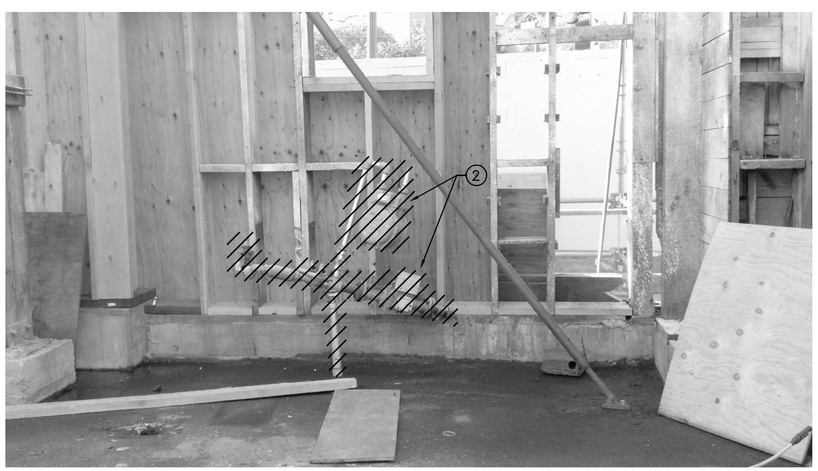

DEMOLITION PHOTO – PIER 29 (E) GAS METERS (1 / M2.1)

NTS


Creegan+D'Angelo INFRASTRUCTURE ENGINEERS
170 Columbus Ave., Suite 240
San Francisco, CA 94133
Tel (415) 834-2010
Fax (415) 834-2011
www.cdengineers.com

YEI ENGINEERS, INC.
7700 Edgewater Drive, Suite 128, Oakland, CA 94621
Phone: (510) 383-1050 Fax: (510) 383-1057


REGISTERED PROFESSIONAL ENGINEER PATRICK R. MALLILL NO. 34258 EXP. 06/30/14 MECHANICAL STATE OF CALIFORNIA

## KEY NOTES:

1. CONNECT (N) 2" LPG PIPING TO (E) GAS EQUIPMENT. FIELD VERIFY (E) GAS EQUIPMENT LOCATION(S) AND RELATED LINE SIZE(S) PRIOR TO START OF WORK. MATCH (E) EQUIPMENT PIPE SIZES.
2. (E) GAS METER ASSEMBLY AND ASSOCIATED APPURTENANCES INCLUDING REGULATORS, FILTERS & SUPPORTS TO BE REMOVED BY PG&E. COORDINATE WITH PG&E PRIOR TO START OF WORK. PG&E TO REMOVE HPG PIPING TO RISER ABOVE GRADE ON EXTERIOR OF BUILDING.
3. REMOVE (E) HPG PIPING TO BELOW GRADE AND ABANDONED. CUT AND CAP PIPING.
4. (N) GAS METER ASSEMBLY TO BE FURNISHED AND INSTALLED BY PG&E. CONTRACTOR SHALL COORDINATE WITH PG&E FOR A COMPLETE AND FULLY FUNCTIONAL SYSTEM.
5. PG& E SHALL FURNISH AND INSTALL ONE GAS METER TO SERVICE PIER 29 1/2 TWO STORY OFFICE BUILDING AND A HEADER LINE WITH TWO STUB-OUT CONNECTIONS FOR TWO FUTURE GAS METERS INSTALLATION TO SERVE PIERS 29 AND 31.
6. (N) 2" LPG PIPING TO PIER 29-1/2 TWO STORY OFFICE BLDG. SEE DETAIL 2 ON THIS SHEET FOR CONTINUATION.
7. PROVIDE (N) FIRE SPRINKLER HEAD INSIDE THE GAS METER ROOM PER THE LATEST NFPA 13 AND CBC. FURNISHED AND INSTALLED BY FIRE PROTECTION. COORDINATE WITH FIRE PROTECTION PRIOR TO START OF WORK.
8. (N) 12"X24" FRESH AIR INTAKE WEATHERPROOF WALL LOUVER WITH BIRDSCREEN (FREE AREA OF 0.86 SQ. FT. @ 260 CFM & 300 FPM). MOUNT BOTTOM OF LOUVER 7'-6" A.F.F.
9. MOUNT (N) EAG INSIDE GAS METER ROOM CEILING.
10. (N) 6"ø GALV. STEEL EXHAUST AIR DUCT PER CMC CHAPTER 5, TABLE 5-5 OR 5-6 UP THROUGH ROOF TO APPROVED EXHAUST DUCT STACK ASSEMBLY. WELDED DUCT CONSTRUCTION.
11. EXHAUST FAN SHALL OPERATE CONTINUOUSLY AND BE MONITORED INCASE OF FAILURE. TIE INTO BLDG. FIRE ALARM PANEL. ALARM WILL BE GENERATED FOR FAILURE. SEE BLDG. PROTECTION DWGS. FOR ADDITIONAL INFORMATION.
12. GALVANIZED STEEL EXHAUST AIR DUCT PER CMC CHAPTER 5, TABLES 5-5 OR 5-6. WELDED CONSTRUCTION.
13. REMOVE (E) LPG PIPING AND ASSOCIATED APPURTENANCES FROM (E) TO REMAIN GAS EQUIPMENT. FIELD VERIFY (E) GAS EQUIPMENT LOCATIONS AND PIPING SIZES PRIOR TO REMOVAL.
14. CONNECT (N) 2" LPG PIPING TO PG&E GAS METER AND UP THROUGH GAS METER ROOF TO PIER 29-1/2 BUILDING.
15. (N) HPG LINE, BF FROM MAIN GAS SUPPLY LINE TO INSIDE OF PIER 29 GAS METER ROOM FURNISHED AND INSTALLED BY PG&E.
16. PG&E SHALL PROVIDE STREET TRENCHING FOR (N) HPG PIPING AND THE CONTRACTOR SHALL PROVIDE SIDEWALK TRENCHING FROM THE CURB TO THE BUILDING.

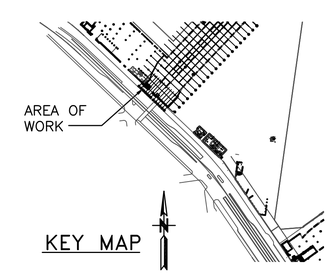


KEY MAP

| NO. | DATE | DESCRIPTION | BY | APP. |
|---|---|---|---|---|
| | | | | |

TABLE OF REVISIONS
CHECK WITH TRACING TO SEE IF YOU HAVE LATEST REVISION

REFERENCE INFORMATION & FILE NO. OF SURVEYS

PORT OF SAN FRANCISCO

SAN FRANCISCO PORT COMMISSION
PORT OF SAN FRANCISCO
DEPARTMENT OF ENGINEERING

| | |
|---|---|
| DESIGNED: AK | DATE: 1/18/13 |
| DRAWN: RH | DATE: 1/18/13 |
| CHECKED: PM | DATE: 1/18/13 |

APPROVED BY SAN FRANCISCO PORT COMMISSION
DATE: _____
CHIEF HARBOR ENGINEER

SCALE: AS SHOWN
SHEET OF SHEETS _ OF _

# PIER 29 GAS METER REPLACEMENT

## MECHANICAL DEMOLITION PHOTO AND NEW WORK FLOOR PLANS

CONTRACT NO.
DRAWING NO. M2.1
FILE NO. XXXX-29-S
REV. NO.

VIEW: PLOT1

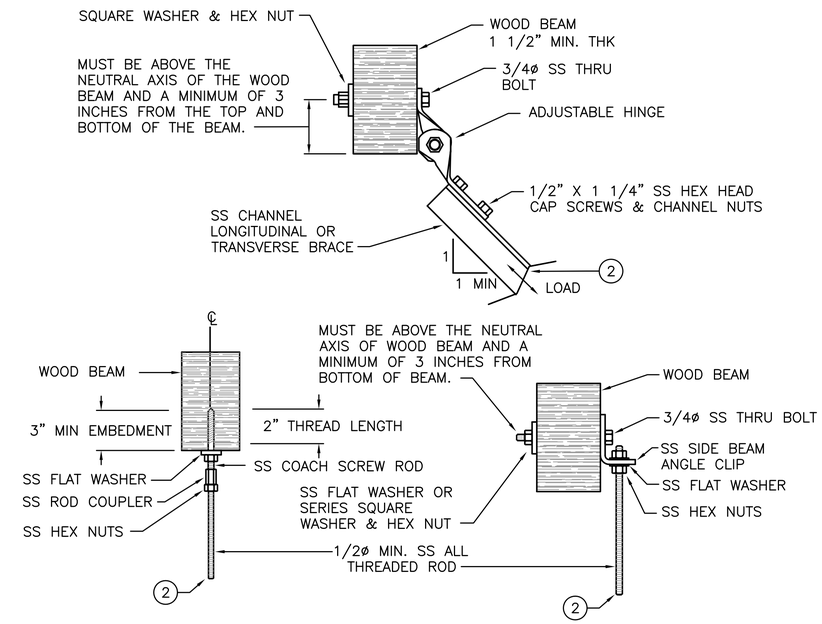


TYPICAL WOOD BEAM MECHANICAL SUPPORT AND SEISMIC ATTACHMENTS (1 / M3.1)

NTS

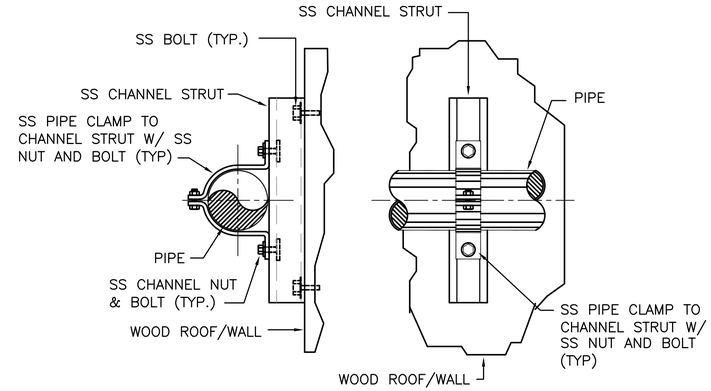


PIPE ROOF/WALL SUPPORT (3 / M3.1)

NTS

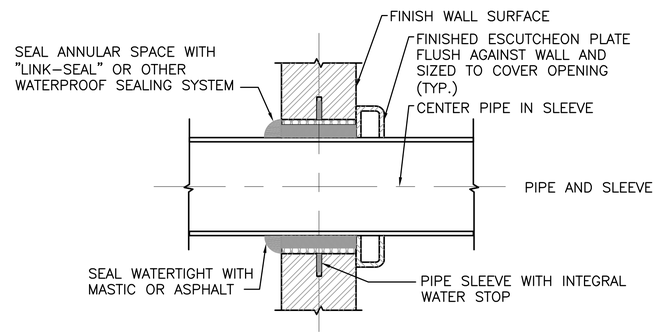


EXTERIOR WALL

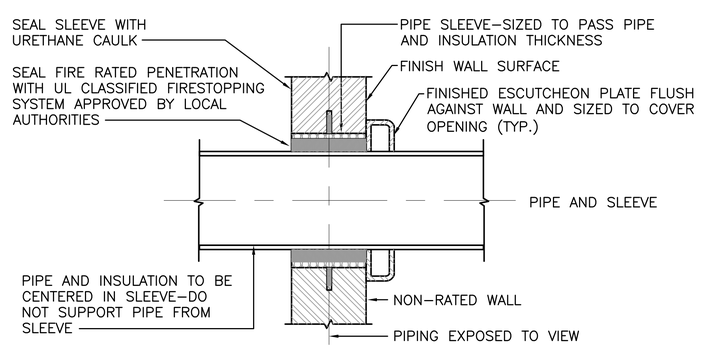


INTERIOR WALLS

PIPE PENETRATION THRU NON-RATED WALL (4 / M3.1)

NTS


Creegan+D'Angelo INFRASTRUCTURE ENGINEERS
170 Columbus Ave., Suite 240
San Francisco, CA 94133
Tel (415) 834-2010
Fax (415) 834-2011
www.cdengineers.com

YEI ENGINEERS, INC.
7700 Edgewater Drive, Suite 128, Oakland, CA 94621
Phone: (510) 383-1050 Fax: (510) 383-1057


REGISTERED PROFESSIONAL ENGINEER — PATRICK R. MALLIN — No. M 34258 — Exp. 06/30/13 — MECHANICAL — STATE OF CALIFORNIA

## SHEET NOTES

1. PROVIDE TRANSVERSE SEISMIC BRACING AT 20'-0" MAX. AND EVERY CHANGE OF DIRECTION.
2. PROVIDE LONGITUDINAL SEISMIC BRACING AT 40'-0" O.C. MAX., MINIMUM OF 2 REQUIRED.
3. BRACE ALL PIPING AND EQUIPMENT TRANSVERSELY AND LONGITUDINALLY ACCORDING TO SMACNA GUIDELINES FOR SEISMIC RESTRAINTS OF MECHANICAL SYSTEM AND PIPING SYSTEM.
4. THE STRUCTURAL ENGINEER OF RECORD SHALL VERIFY THE ADEQUACY OF THE STRUCTURE TO SUPPORT THE HANGER AND BRACE LOADS.
5. INSTALL PIPE INSULATION BETWEEN DISSIMILAR METALS TO PREVENT CONTACT BETWEEN DISSIMILAR METALS.

## KEY NOTES

(1) INSTALL ROD STIFFENER WHEN LENGTH EXCEEDS THE SCHEDULE LENGTH:

| MAX. PIPE SIZE, IN. | ROD SIZE, IN. | MAX. ROD LENGTH, IN. |
|---|---|---|
| 1/2 UP TO 2 | 3/8 | 19 |
| 2 1/2 TO 3 | 1/2 | 25 |
| 4 TO 5 | 5/8 | 31 |
| 6 | 3/4 | 37 |
| 8 TO 10 | 7/8 | 43 |

(2) REFER TO TYPICAL PIPE HANGER SUPPORT DETAIL FOR APPLICABLE CONTINUATION.

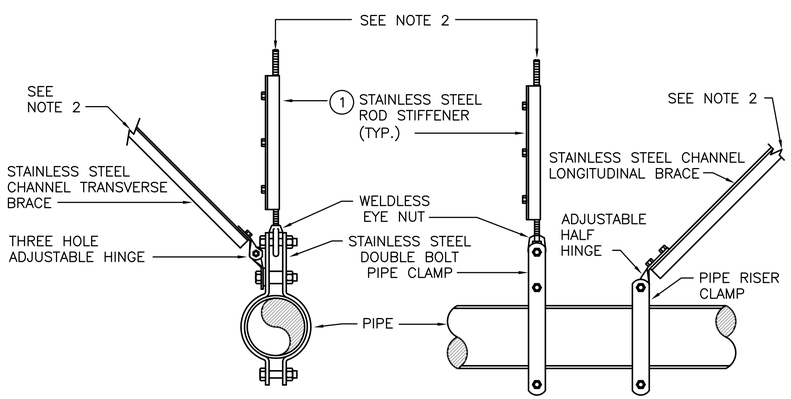


NOTES:

1. ALL PIPE SUPPORTS SHALL BE PIPING TECHNOLOGY, INC. OR APPROVED EQUAL.
2. REFER TO DETAIL 1 FOR TYPICAL SUPPORT AND SEISMIC ATTACHMENT DETAILS FOR APPLICABLE CONTINUATION.

TYPICAL PIPE HANGER SUPPORT DETAIL (2 / M3.1)

NTS

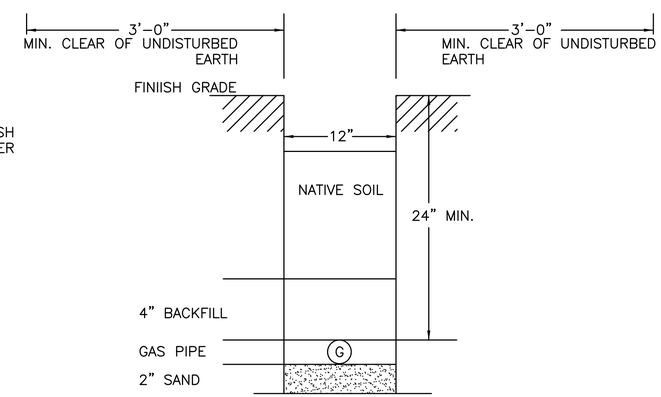


NOTE: FOLLOW PG & E SERVICE REQUIREMENTS PER 2012 PG&E GREENBOOK

GAS ONLY TRENCH (5 / M3.1)

NTS

| NO. | DATE | DESCRIPTION | BY | APP. |
|---|---|---|---|---|

TABLE OF REVISIONS
CHECK WITH TRACING TO SEE IF YOU HAVE LATEST REVISION

REFERENCE INFORMATION & FILE NO. OF SURVEYS

SAN FRANCISCO PORT COMMISSION
PORT OF SAN FRANCISCO
DEPARTMENT OF ENGINEERING

DESIGNED: AK DATE: 1/18/13
DRAWN: RH DATE: 1/18/13
CHECKED: PM DATE: 1/18/13

APPROVED BY SAN FRANCISCO PORT COMMISSION
DATE: _____
CHIEF HARBOR ENGINEER

SCALE: AS NOTED
SHEET OF SHEETS _ OF _

PIER 29
GAS METER REPLACEMENT

MECHANICAL DETAILS

CONTRACT NO.
DRAWING NO. M3.1
FILE NO. XXXX-29-S
REV. NO.

VIEW: PLOT1

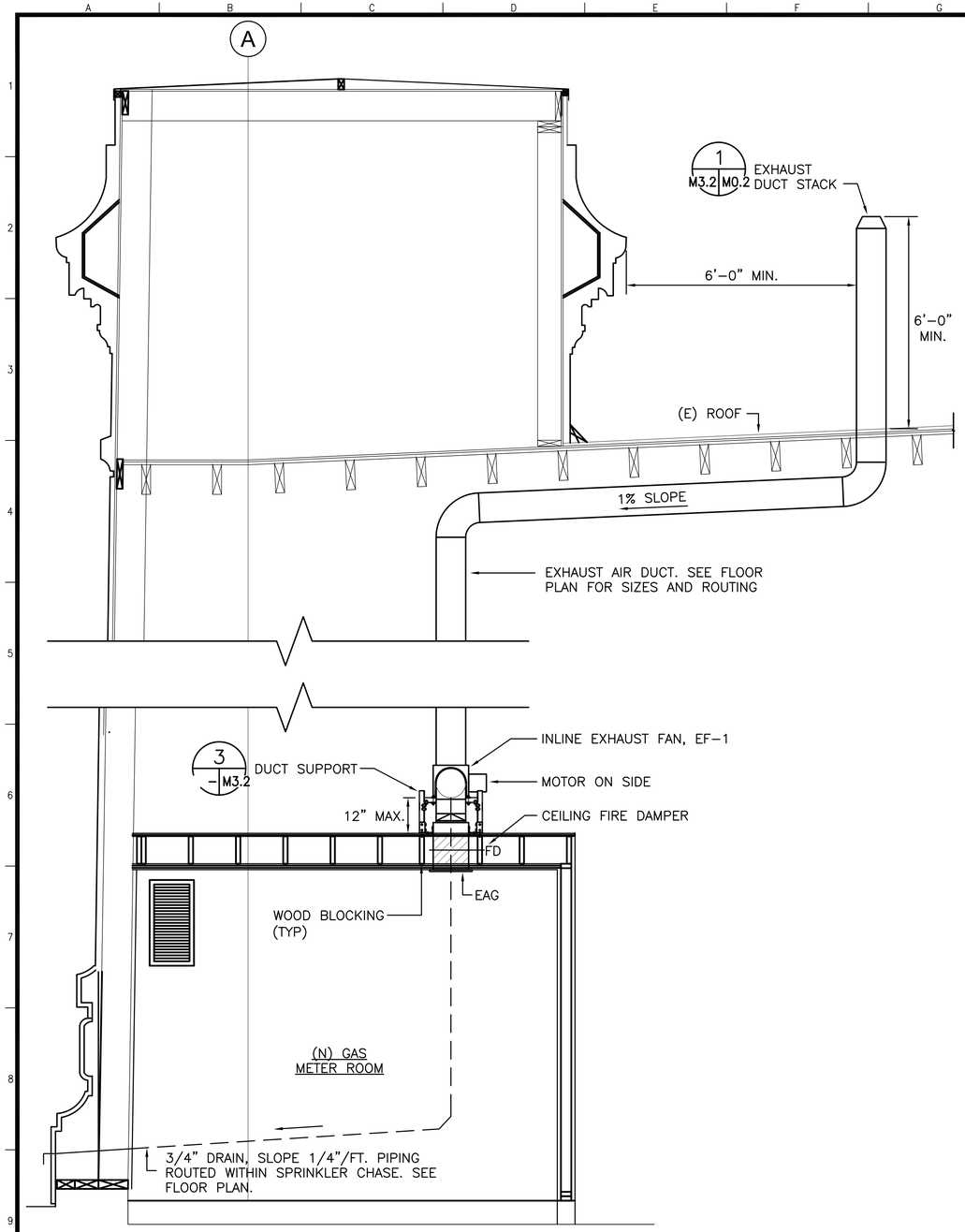


PIER 29 SECTION VIEW (1 / M3.2)

NTS

## DETAIL #3 NOTES:

1. INSTALL LOUVER PER MANUFACTURER'S GUIDELINES.
2. PROVIDE LOUVER BY RUSKIN MODEL ELF6375DXH OR APPROVED EQUAL.

## DETAIL #3 KEY NOTES:

1. WOOD WALL.
2. ATTACH TO STRUCTURE WITH STAINLESS STEEL ANCHOR BOLTS. MIN. TWO BOLTS ON EA. SIDE.
3. WALL LOUVER WITH BIRDSCREEN (MAX. 6" DEPTH).
4. EXTRUDED ALUMINUM LOUVER.


Creegan+D'Angelo INFRASTRUCTURE ENGINEERS
170 Columbus Ave., Suite 240
San Francisco, CA 94133
Tel (415) 834-2010
Fax (415) 834-2011
www.cdengineers.com

YEI ENGINEERS, INC.
7700 Edgewater Drive, Suite 128, Oakland, CA 94621
Phone: (510) 383-1050 Fax: (510) 383-1057


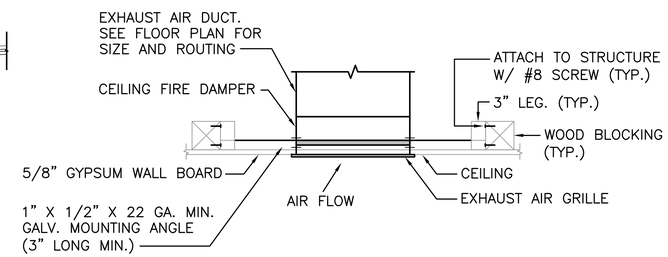


NOTES:

1. INSTALL CEILING FIRE DAMPERS PER MANUFACTURER'S INSTRUCTIONS.
2. PROVIDE CEILING FIRE DAMPERS BY RUSKIN MODEL CFD2W OR APPROVED EQUAL.

TYPICAL HORIZONTAL FIRE DAMPER (2 / M3.2)

NTS

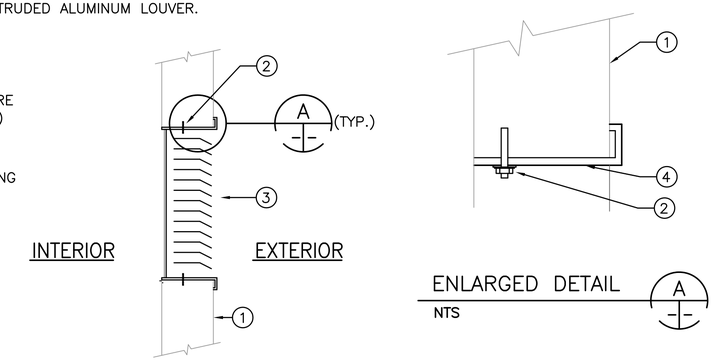


ENLARGED DETAIL (A)

NTS

WALL LOUVER DETAIL (3 / M3.2)

NTS

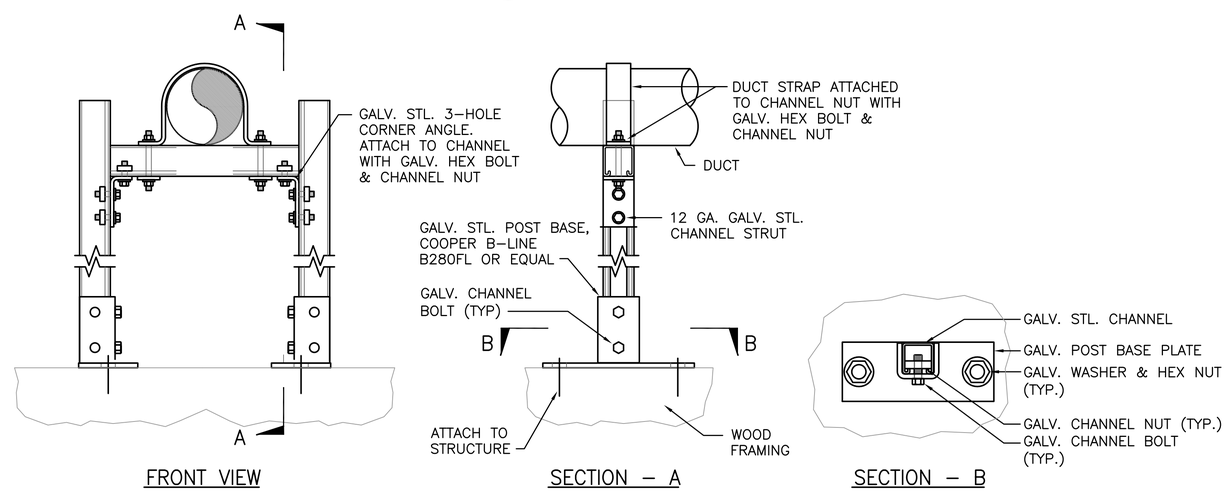


TYPICAL DUCT SUPPORT DETAIL (4 / M3.2)

SCALE: 3"=1'–0"

| NO. | DATE | DESCRIPTION | BY | APP. |
|---|---|---|---|---|

TABLE OF REVISIONS
CHECK WITH TRACING TO SEE IF YOU HAVE LATEST REVISION

REFERENCE INFORMATION & FILE NO. OF SURVEYS

SAN FRANCISCO PORT COMMISSION
PORT OF SAN FRANCISCO
DEPARTMENT OF ENGINEERING

| | |
|---|---|
| DESIGNED: AK | DATE: 1/18/13 |
| DRAWN: RH | DATE: 1/18/13 |
| CHECKED: PM | DATE: 1/18/13 |

APPROVED BY SAN FRANCISCO PORT COMMISSION
DATE: _____
CHIEF HARBOR ENGINEER

SCALE: AS SHOWN
SHEET OF SHEETS _ OF _

PIER 29
GAS METER REPLACEMENT

MECHANICAL DETAILS

CONTRACT NO.
DRAWING NO. M3.2
FILE NO. XXXX–29–S
REV. NO.

VIEW: PLOT1