LEGEND

- OBJECT TO BE REMOVED
- WALL TO BE REMOVED
- EXISTING WALL TO REMAIN
- NEW WALL - 2x4 OR 2x6 STUDS , SEE NOTES FOR FINISH
- 1 HR WALL 2x4 OR 2x6 STUDS W/ 5/8" TYPE X GYP. BD. BOTH SIDES

VICINITY MAP

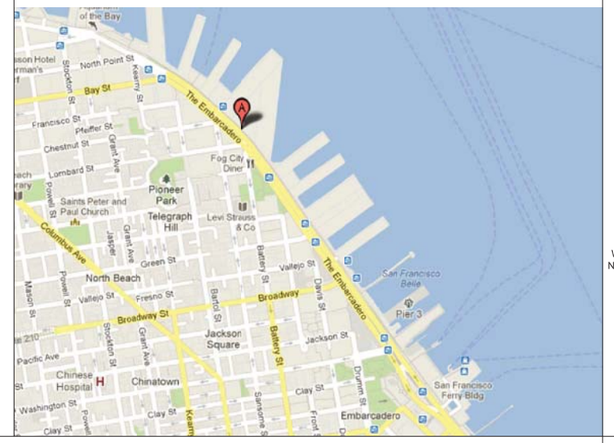

2325 Third Street, Ste 322
San Francisco, CA 94107
p. 415.252.7044
Michael Tauber Architecture

Creegan+D'Angelo INFRASTRUCTURE ENGINEERS
170 Columbus Ave., Suite 240
San Francisco, CA 94133
Tel (415) 834-2010
Fax (415) 834-2011
www.cdengineers.com

LICENSED ARCHITECT MICHAEL TAUBER C 25947 12.31.2013 Renewal Date STATE OF CALIFORNIA

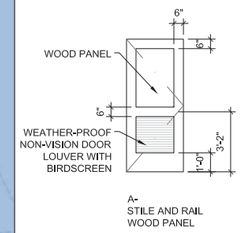

DOOR TYPES

DOOR SCHEDULE

DOOR NO.	FLOOR	ROOM	SIZE	JAMB MATERIAL	DOOR MATERIAL	FIN.	DOOR TYPE	DOOR THK.	HARDWARE FUNCTION	NOTES
1	FIRST FLOOR	MENS	3'-0" x 7'-0"	WOOD, PTD. COLOR TBD	WOOD, PTD. COLOR TBD	PAINT	A	1 3/4"	PATIO	KICK PLATE PUSH SIDE. PROVIDE ACCESSIBILITY SIGN ON DOOR, SEE 1/A0.1
2	FIRST FLOOR	WOMENS	3'-0" x 7'-0"	WOOD, PTD. COLOR TBD	WOOD, PTD. COLOR TBD	PAINT	A	1 3/4"	PATIO	KICK PLATE PUSH SIDE. PROVIDE ACCESSIBILITY SIGN ON DOOR, SEE 1/A0.1

HARDWARE SCHEDULE

1. EACH DOOR TO HAVE (3) HINGES - IVES 5BB1HW 4.5 x 4.5, (1) DEADBOLT - SCHLAGE B663P, (1) PUSH PLATE - IVES 8200 4" x 16", (1) PULL PLATE - IVES 8302-8 4" x 16", (1) SURFACE CLOSER - LCN 4040XP X SPL (1) KICK PLATE - IVES 8400 10" x 2" LDW, (1) MOP PLATE - IVES 8400 6" x 2" LDW, (1) WALL STOP - IVES WS402CCV, (1 SET) WEATHERSTRIP - NATIONAL GUARD PRODUCTS 162SDKB, (1) DOOR SHOW - NATIONAL GUARD PRODUCTS 36EVDKB, (1) THRESHOLD - NATIONAL GUARD PRODUCTS 413DKB

ABBREVIATIONS

A.C.	AIR CONDITIONING
A.C. TILE	ACOUSTIC TILE
ACCESS.	ACCESSIBLE
ACOUST.	ACOUSTICAL
A.P.	ACCESS PANEL
A.D.	AREA DRAIN
ADJ.	ADJACENT
ADJST.	ADJUSTABLE
A.E.S.	ABOVE EXISTING SLAB
A.E.S.S.	ARCHITECTURAL EXPOSED STRUCTURAL STEEL
A.F.F.	ABOVE FINISHED FLOOR
AGGR.	AGGREGATE
AL .	ALUMINUM
ALUM.	ALUMINUM
APPROX.	APPROXIMATELY
ARCH.	ARCHITECTURAL
ASB.	ASBESTOS
ASPH.	ASPHALT
@	AT
BD.	BOARD
BITUM.	BITUMINOUS
BLDG.	BUILDING
BLK.	BLOCK
BLK'G	BLOCKING
BM.	BEAM
B.O.	BOTTOM OF
BOT.	BOTTOM
CAB.	CABINET
C.B.	CATCH BASIN
CEM.	CEMENT
CER.	CERAMIC
C.I.	CAST IRON
C.L.	CENTER LINE
CLG.	CEILING
CLKG.	CAULKING
CLO.	CLOSET
CLR.	CLEAR
C.M.U.	CONCRETE MASONRY UNIT
CNTR.	COUNTER
CO.	TRANSLUCENT CORIAN
COL.	COLUMN
COM.	COMPACT
CONC.	CONCRETE
CONN.	CONNECTION
CONSTR.	CONSTRUCTION
CONT.	CONTINUOUS
CORR.	CORRIDOR
C.S.C.I.	CONTRACTOR SUPPLIED CONTRACTOR INSTALLED
C.T.	CERAMIC TILE
CTR.	CENTER
CTSK.	COUNTERSUNK
DBL.	DOUBLE
DEPT.	DEPARTMENT
DET.	DETAIL
D.F.	DRINKING FOUNTAIN
DIA.	DIAMETER
DIM.	DIMENSION
DN.	DOWN
D.O.	DOOR OPENING
DRESS.	DRESSING
DS.	DOWNSPOUT
D.S.P.	DRY STANDPIPE
DTL.	DETAIL
DWG.	DRAWING
E.	EAST
(E)	EXISTING
EA.	EACH
E.J.	EXPANSION JOINT
EL.	ELEVATION
ELEC.	ELECTRICAL
ELEV.	ELEVATOR
EMER.	EMERGENCY
ENCL.	ENCLOSURE
E.P.	ELECTRICAL PANEL BOARD
EQ.	EQUAL
EQPT.	EQUIPMENT
ESC.	ESCALATOR
E.W.C.	ELECTRIC WATER COOLER
EXIST.	EXISTING
EXP.	EXPANSION
EXPO.	EXPOSED
EXT.	EXTERIOR
F.A.	FIRE ALARM
F.B.	FLAT BAR
F.D.	FLOOR DRAIN
FDN.	FOUNDATION
F.E.C.	FIRE EXTINGUISHER CABINET
F.H.C.	FIRE HOSE CABINET
FIN.	FINISH
FIXT.	FIXTURE
F.L.	FLOW LINE
FLASH.	FLASHING
FLUOR.	FLUORESCENT
F.O.	FACE OF
F.O.C.	FACE OF CONCRETE
F.O.F.	FACE OF FINISH
F.O.S.	FACE OF STUDS
F.P.	FIRE PROOF
FPRF'G	FIRE PROOFING
F.R.	FIRE RETARDANT
F.T.	FIRE TREATED
FT.	FOOT/FEET
FTG.	FOOTING
F.S.	FULL SIZE
FURR.	FURRING
FUT.	FUTURE
GA.	GAUGE
GALV.	GALVANIZED
G.B.	GRAB BAR
G.C.	GENERAL CONTRACTOR
G.H.	GARMENT HOOK
GL.	GLASS
G.M.	GAS METER
GND.	GROUND
GR.	GRADE
GSM	GALVANIZED SHEET METAL
G.W.B.	GYPSUM WALLBOARD
GYP.	GYPSUM
GYPBD.	GYPSUM BOARD
H.B.	HOSE BIBB
H.C.	HOLLOW CORE
HD.	HAND
HDWD.	HARDWOOD
H.M.	HOLLOW METAL
HORIZ.	HORIZONTAL
HR.	HOUR
HT.	HEIGHT
I.D.	INSIDE DIAMETER
INSUL.	INSULATION
INT.	INTERIOR
JAN.	JANITOR
JT.	JOINT
KIT.	KITCHEN
L	ANGLE
LAM.	LAMINATE
LAV.	LAVATORY
LL	LANDLORD
LKR.	LOCKER
LT.	LIGHT
MANUF.	MANUFACTURER
MAX.	MAXIMUM
M.C.	MEDICINE CABINET
MDF	MEDIUM DENSITY FIBERBOARD
MECH.	MECHANICAL
MEMB.	MEMBRANE
MFR.	MANUFACTURER
MILL WK.	MILLWORK
M.H.	MANHOLE
MIN.	MINIMUM
MIR.	MIRROR
MISC.	MISCELLANEOUS
M.O.	MASONRY OPENING
MTL.	METAL
MTD.	MOUNTED
MUL.	MULLION
MWC	MILLWORK CONTRACTOR
N.I.C.	NOT IN CONTRACT
(N)	NEW
NO.	NUMBER
NOM.	NOMINAL
N.T.S.	NOT TO SCALE
#	NUMBER
O.A.	OVERALL
OBS.	OBSCURE
O.C.	ON CENTER
O.D.	OUTSIDE DIAMETER
OFF.	OFFICE
OPN'G	OPENING
OPP.	OPPOSITE
OPP. HD.	OPPOSITE HAND
O.S.C.I.	OWNER SUPPLIED CONTRACTOR INSTALLED
P.	PAINT
PC.	PRECAST CONCRETE
PCS.	PIECES
PL.	PLATE
PLAM.	PLASTIC LAMINATE
PLAS.	PLASTER
PLYWD.	PLYWOOD
POL.	POLISHED
PR.	PAIR
PRCST.	PRECAST
PT.	POINT
P.T.D.	PAPER TOWEL DISPENSER
PTD.	PAINTED
P.T.D./R.	PAPER TOWEL DISPENSER RECEPTACLE COMBINATION
PTN.	PARTITION
P.T.R.	PAPER TOWEL RECEPTACLE
PU.	POLYURETHANE
PY.	POLYCARBONATE
Q.T.	QUARRY TILE
R.	RISER
RAD.	RADIUS
RCP	REFLECTED CEILING PLAN
R.D.	ROOF DRAIN
RDWD.	REDWOOD
REF.	REFERENCE
REFR.	REFRIGERATOR
REINF.	REINFORCED
REG.	REGISTER
REQ.	REQUIRED
RESIL.	RESILIENT
RET.	RETARDANT
RGTR.	REGISTER (CASH)
RM.	ROOM
R.O.	ROUGH OPENING
R.W.L.	RAIN WATER LEADER
S.	SOUTH
S.B.O.	SUPPLIED BY OWNER
S.C.	SOLID CORE
S.C.D.	SEAT COVER DISPENSER
SCH.	SCHEDULE
SCHED.	SCHEDULE(D)
S.D.	SOAP DISPENSER
SECT.	SECTION
S.E.D.	SEE ELECTRICAL DRAWINGS
SH.	SHELF
SHR.	SHOWER
SHT.	SHEET
SIM.	SIMILAR
S.M.D.	SEE MECHANICAL DRAWINGS
S.N.D.	SANITARY NAPKIN DISPENSER
S.N.R.	SANITARY NAPKIN RECEPTACLE
S.P.D.	SEE PLUMBING DRAWINGS
SPEC.	SPECIFICATION
SPEC'D	SPECIFIED
SQ.	SQUARE
S.S.D.	SEE STRUCTURAL DRAWINGS
S.S.K.	SERVICE SINK
SST.	STAINLESS STEEL
ST.	STONE
STA.	STATION
STD.	STANDARD
STL.	STEEL
STOR.	STORAGE
STRUCT.	STRUCTURAL
SUSP.	SUSPENDED
SYM.	SYMMETRICAL
T.	TREAD
T.B.	TOWEL BAR
TC	TOP OF CURB
T.C.	TERRA COTTA
TEMP.	TEMPERED
TER.	TERRAZZO
THK.	THICK
T.O.	TOP OF
T.O.C.	TOP OF CONCRETE
T.O.P.	TOP OF PAVEMENT
T.O.S.	TOP OF SLAB
T.S.	TUBE STEEL
TYP.	TYPICAL
UNEQ.	UNEQUAL
U.O.N.	UNLESS OTHERWISE NOTED
UR.	URINAL
V.I.F.	VERIFY IN FIELD
VERT.	VERTICAL
VEST.	VESTIBULE
W.	WEST
W/	WITH
W.C.	WATER CLOSET
WD.	WOOD
WDO.	WINDOW
W/O	WITHOUT
WP.	WALLPAPER
WT.	WEIGHT

SHEET INDEX

ARCHITECTURAL:
A0.0 PROJECT INFO, ABBREVIATIONS, VICINITY MAP, DOOR TYPES AND DOOR SCHEDULE
A0.1 ACCESSIBILITY REQUIREMENTS
A1.0 DEMOLITION, CONSTRUCTION AND REFLECTED CEILING PLANS
A2.0 INTERIOR ELEVATIONS
A3.0 EXTERIOR ELEVATION AND SECTION

STRUCTURAL:
S1.0 GENERAL NOTES
S2.0 STRUCTURAL PLANS
S3.0 DETAILS

MECHANICAL:
M0.1 MECHANICAL ABBREVIATIONS, LEGEND AND GENERAL NOTES
M0.2 MECHANICAL DETAILS AND EQUIPMENT SCHEDULE
M1.1 MECHANICAL SPECIFICATIONS AND NEW WORK FLOOR PLAN

PLUMBING:
P0.1 PLUMBING ABBREVIATIONS, LEGEND, AND GENERAL NOTES
P0.2 PLUMBING EQUIPMENT SCHEDULES
P0.3 PLUMBING SPECIFICATIONS
P0.4 PLUMBING SPECIFICATIONS
P1.1 PLUMBING DEMOLITION FLOOR PLANS
P2.1 PLUMBING FLOOR PLANS - NEW WORK
P2.2 PLUMBING NEW WORK PHOTOS
P3.1 PLUMBING SCHEMATIC PIPING DIAGRAMS
P4.1 PLUMBING DETAILS
P4.2 PLUMBING DETAILS
P4.3 PLUMBING DETAILS

ELECTRICAL:
E0.1 ELECTRICAL ABBREVIATIONS, LEGEND, AND GENERAL NOTES
E0.2 ELECTRICAL SPECIFICATIONS
E0.3 ELECTRICAL SINGLE LINE DIAGRAM, PANELBOARD SCHEDULE
E1.1 ELECTRICAL RESTROOM FLOOR PLANS DEMOLITION
E2.1 ELECTRICAL RESTROOM FLOOR PLANS NEW WORK
E2.2 ELECTRICAL SHED EGRESS LIGHTING NEW WORK

APPLICABLE REGS & STDS

APPLICABLE CODES:

2010 PORT OF SAN FRANCISCO BUILDING CODE.
2010 PORT OF SAN FRANCISCO MECHANICAL CODE.
2010 PORT OF SAN FRANCISCO PLUMBING CODE.
2010 PORT OF SAN FRANCISCO ELECTRICAL CODE.
2010 CALIFORNIA FIRE CODE.
ENERGY CODE - TITLE 24 - CALIFORNIA CODE OF REGULATIONS
LIFE SAFETY CODE, 1999 NFPA 72
AMERICANS WITH DISABILITIES ACT

DESIGN TEAM CONTACT INFORMATION

CLIENT:
PORT OF SAN FRANCISCO:
PIER 1, SAN FRANCISCO
94111

CONTACT:
PROJECT MANAGER, ARCHITECT, ADA COORDINATOR
WENDY PROCTOR, AIA, CASp
415-274-0592

STRUCTURAL ENGINEER/PRIME CONSULTANT:
CREEGAN + D'ANGELO
170 COLUMBUS AVENUE
SAN FRANCISCO CA 94108
PH: 415- 834-2010

CONTACT: DEAN SEDLACHEK

ARCHITECT:
MICHAEL TAUBER ARCHITECTURE
2325 THIRD STREET #322
SAN FRANCISCO, CA 94107
PH: 415-252-7044

CONTACT: MICHAEL TAUBER

PRESERVATION ARCHITECT:
CAREY & CO. INC. ARCHITECTURE
46-0 BUSH STREET
SAN FRANCISCO, CA 94108
PH: 415-773-0773

CONTACT: NANCY GOLDENBERG

MECHANICAL AND PLUMBING:
YEI ENGINEERS, INC
7700 EDGEWATER DRIVE, SUITE 128
OAKLAND , CA 94621
PH: 510-383-1050

CONTACT: ANDREA KING

ELECTRICAL ENGINEERING:
YEI ENGINEERS, INC
7700 EDGEWATER DRIVE, SUITE 128
OAKLAND , CA 94621
PH: 510-383-1050

CONTACT: BRANDON YEE

NO.	DATE	DESCRIPTION	BY	APP.

TABLE OF REVISIONS
CHECK WITH TRACING TO SEE IF YOU HAVE LATEST REVISION

REFERENCE INFORMATION & FILE NO. OF SURVEYS

SAN FRANCISCO PORT COMMISSION
PORT OF SAN FRANCISCO
DEPARTMENT OF ENGINEERING

DESIGNED: MT DATE:
DRAWN: JG/MT DATE:
CHECKED: MT DATE: 11/27/12

APPROVED BY SAN FRANCISCO PORT COMMISSION
DATE: _____
CHIEF HARBOR ENGINEER

SCALE: NONE
SHEET OF SHEETS

PIER 29 RESTROOM REMODEL

COVER SHEET

CONTRACT NO.
DRAWING NO. A0.0
FILE NO. XXXX-29-S
REV. NO.

VIEW: PLOT1

Michael Tauber Architecture
2325 Third Street, Ste 322
San Francisco, CA 94107
p. 415.252.7044

Creegan+D'Angelo INFRASTRUCTURE ENGINEERS
170 Columbus Ave., Suite 240
San Francisco, CA 94133
Tel (415) 834-2010
Fax (415) 834-2011
www.cdengineers.com

LICENSED ARCHITECT MICHAEL TAUBER C 25947 12.31.2013 Renewal Date STATE OF CALIFORNIA

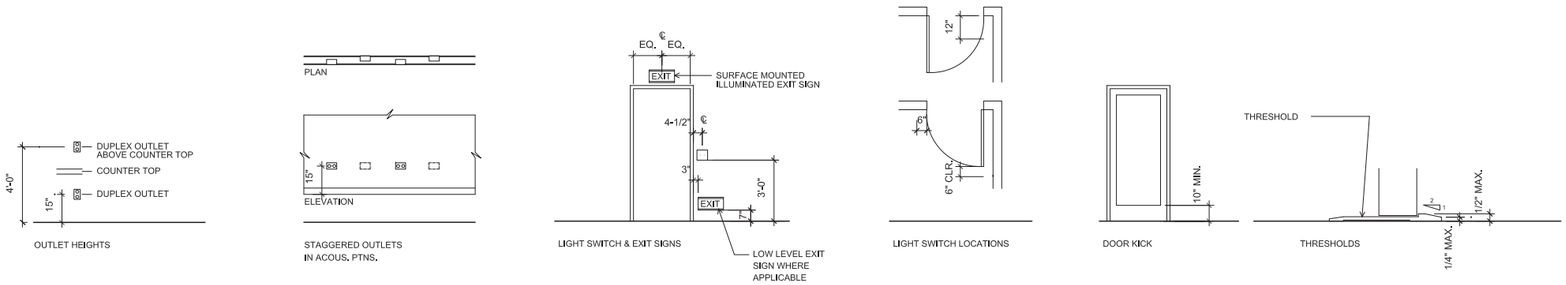

6 A0.1 ACCESSIBILITY STDS - OULETS, LIGHT SWITCHES, EXIT SIGNS AND DOOR JAMBS

SCALE: NTS

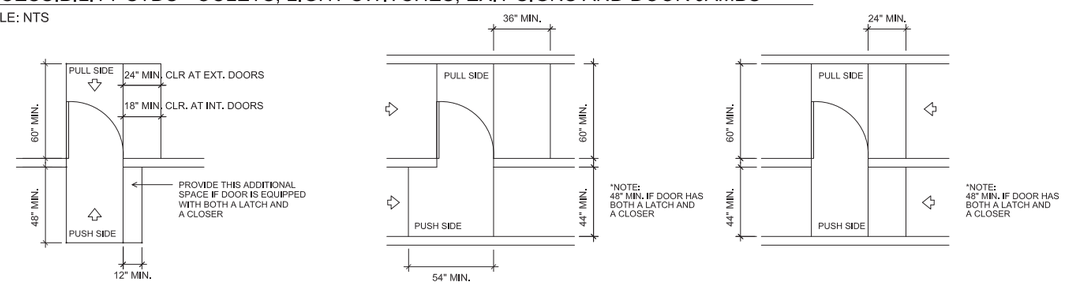

5 A0.1 ACCESSIBILITY STDS - CLEARANCE AT DOORS

SCALE: NTS

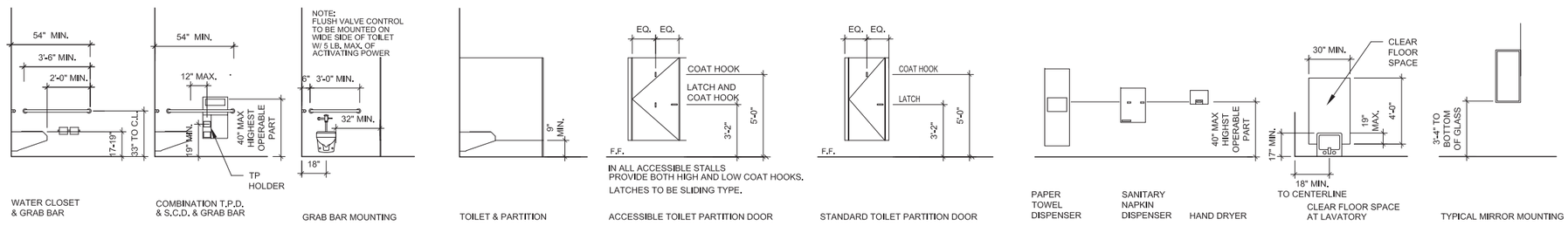

3 A0.1 ACCESSIBILITY STDS - TOILET ACCESSORIES AND PARTITION HTS.

SCALE: NTS

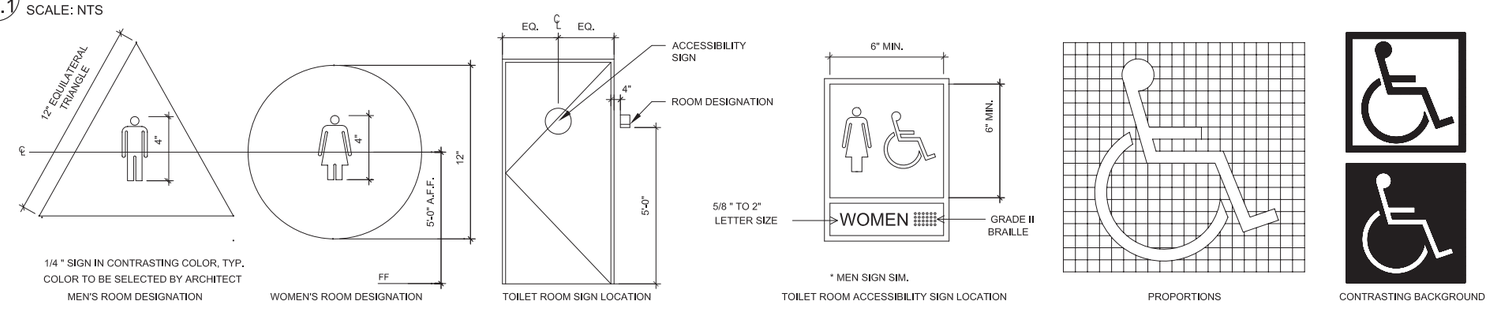

1 A0.1 ACCESSIBILITY STDS - SIGNAGE, IDENTIFICATION AND INTL SYMBOL OF ACCESSIBILITY.

SCALE: NTS

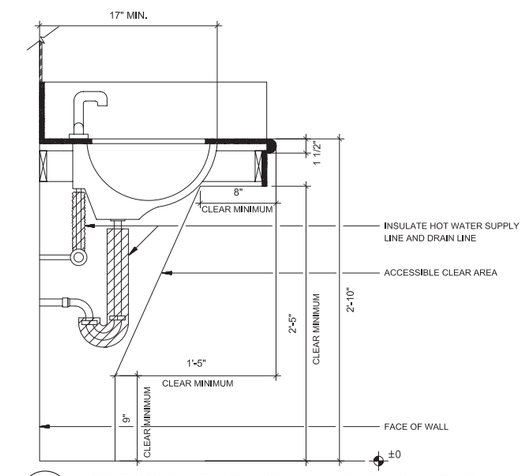

4 A0.1 ACCESSIBILITY STDS - LAV CLEARANCES

SCALE: NTS

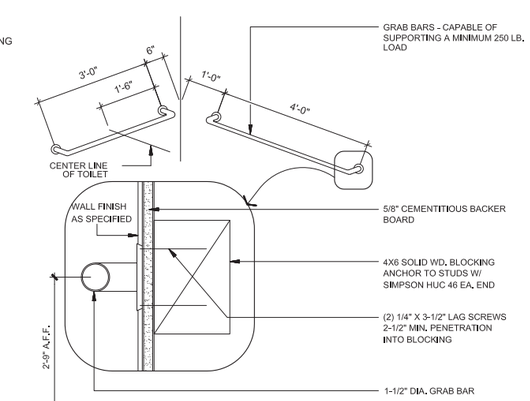

2 A0.1 ACCESSIBILITY STDS - GRAB BAR DETAILS.

SCALE: NTS

NO.	DATE	DESCRIPTION	BY	APP.

TABLE OF REVISIONS
CHECK WITH TRACING TO SEE IF YOU HAVE LATEST REVISION

REFERENCE INFORMATION & FILE NO. OF SURVEYS

SAN FRANCISCO PORT COMMISSION
PORT OF SAN FRANCISCO
DEPARTMENT OF ENGINEERING

DESIGNED: MT	DATE:
DRAWN: JG/MT	DATE:
CHECKED: MT	DATE: 11/27/12

APPROVED BY SAN FRANCISCO PORT COMMISSION
DATE: _____
CHIEF HARBOR ENGINEER

SCALE: AS NOTED
SHEET OF SHEETS

PIER 29
RESTROOM REMODEL

ACCESSIBILITY REQUIREMENTS/DETAILS

CONTRACT NO.
DRAWING NO. A0.1
FILE NO. XXXX-29-S
REV. NO.

VIEW: PLOT1

GENERAL NOTES

1. SEE PLUMBING DRAWINGS FOR PLUMBING FIXTURES.
2. SEE ELECTRICAL DRAWINGS FOR LIGHTING & ELECTRICAL.
3. SEE A0.0 FOR DOOR SCHEDULE AND DOOR TYPES.
4. REFER TO WOMEN'S RESTROOM FOR ADDITIONAL NOTES FOR MENS RESTROOM.
5. SEE INTERIOR ELEVATIONS FOR WALL FINISH REQUIREMENTS AND ADDITIONAL NOTES.

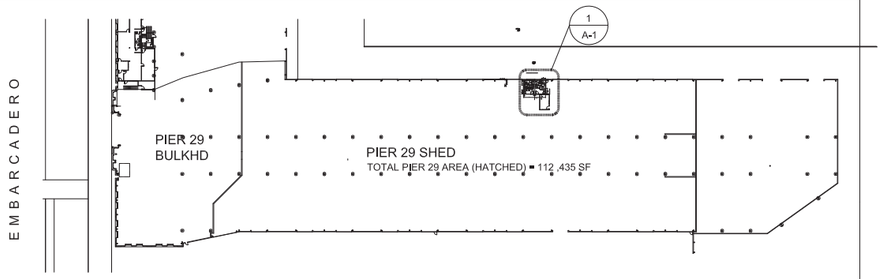

4/A1 PIER 29 KEY PLAN
SCALE: 1" = 80'-0"

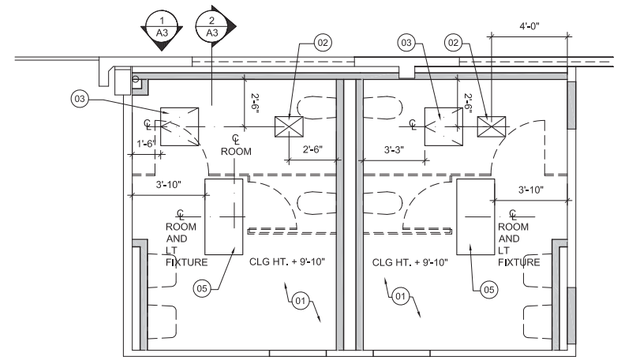

Michael Tauber Architecture
2325 Third Street, Ste 322
San Francisco, CA 94107
p. 415.252.7044

Creegan+D'Angelo INFRASTRUCTURE ENGINEERS
170 Columbus Ave., Suite 240
San Francisco, CA 94133
Tel (415) 834-2010
Fax (415) 834-2011
www.cdengineers.com

LICENSED ARCHITECT MICHAEL TAUBER C 25947 12.31.2013 Renewal Date STATE OF CALIFORNIA

RCP KEY NOTES

01 (N) 5/8" GYP BD. CEILING - LEVEL 4 FINISH - PAINT COLOR - BENJAMIN MOORE, OC -29 , FLORAL WHITE, EGGSHELL FINISH
02 EXHAUST FAN, S.M.D.
03 PTD. ACCESS DOOR - KARP KDW 24x24
04 NOT USED
05 RECESSED LIGHT FIXTURE, S.E.D.

3/A1 PIER 29 PROPOSED BATHROOM REFLECTED CEILING PLAN
SCALE: 1/4" = 1'-0"

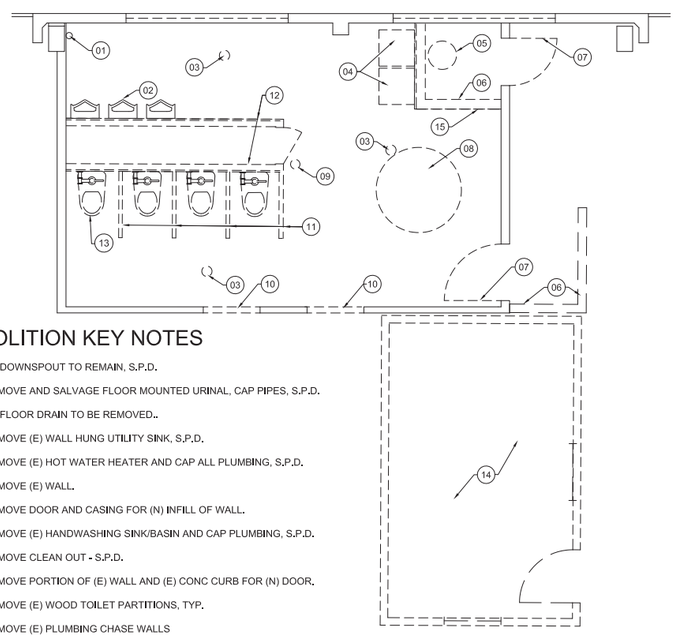

DEMOLITION KEY NOTES

01 (E) DOWNSPOUT TO REMAIN, S.P.D.
02 REMOVE AND SALVAGE FLOOR MOUNTED URINAL, CAP PIPES, S.P.D.
03 (E) FLOOR DRAIN TO BE REMOVED..
04 REMOVE (E) WALL HUNG UTILITY SINK, S.P.D.
05 REMOVE (E) HOT WATER HEATER AND CAP ALL PLUMBING, S.P.D.
06 REMOVE (E) WALL.
07 REMOVE DOOR AND CASING FOR (N) INFILL OF WALL.
08 REMOVE (E) HANDWASHING SINK/BASIN AND CAP PLUMBING, S.P.D.
09 REMOVE CLEAN OUT - S.P.D.
10 REMOVE PORTION OF (E) WALL AND (E) CONC CURB FOR (N) DOOR.
11 REMOVE (E) WOOD TOILET PARTITIONS, TYP.
12 REMOVE (E) PLUMBING CHASE WALLS
13 REMOVE AND SALVAGE (E) TOILET, TYP OF 4
14 MOVE TRAILER/OFFICE TO PIER 31, LOCATION TO BE IDENTIFIED BY THE PORT.
15 REMOVE SIDING AND SALVAGE FOR REUSE.

1/A1 PIER 29 BATHROOM DEMOLITION PLAN
SCALE: 1/4" = 1'-0"

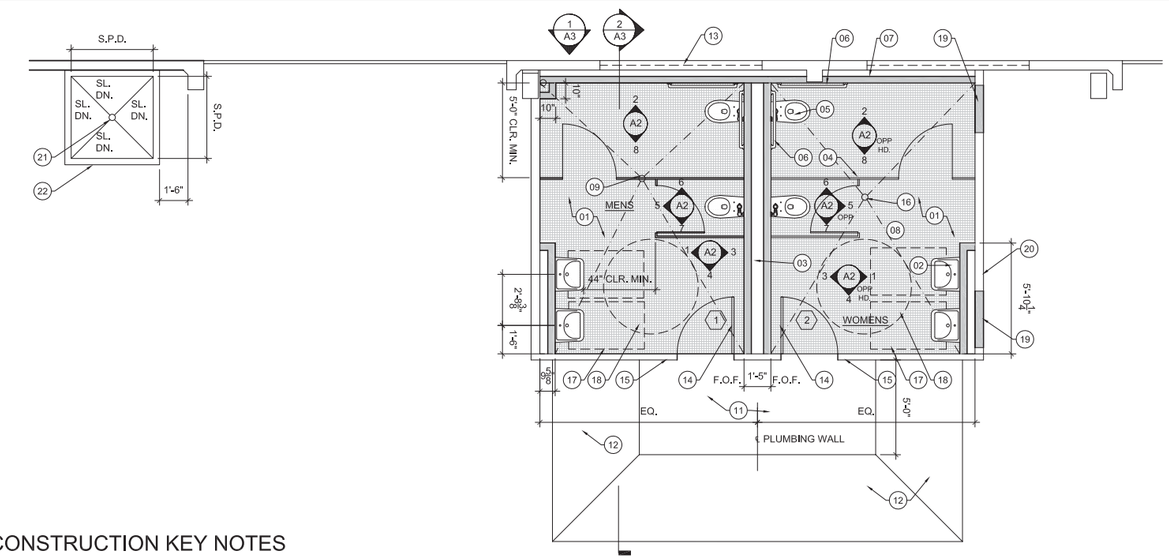

CONSTRUCTION KEY NOTES

01 PROVIDE FLOOR LEVELING AND RESLOPE SLAB TO SLOPE TO DRAIN 1/4" / 12 MAX.
02 (N) WALL MOUNTED LAV, TYP.
03 (N) PLUMBING CHASE WALL, S.P.D.
04 (N) TOILET PARTITION, TYP.
05 (N) WALL HUNG TOILET, TYP.
06 (N) GRAB BARS AT ACCESSIBLE STALLS.
07 (N) FURRED WALL W/ 5/8" GYP. BD. AND TILE, PROVIDE TOILET ACCESSORIES IN THE WALL. S.S.D.
08 (E) FLOOR PROVIDE CONCRETE TOPPING TO RESLOPE TO MEET NEW DRAIN, PROVIDE SEALER/TOPPING TO MEET CODE REQUIREMENTS FOR NON ABSORBENT SURFACE. ADD ALTERNATE: (N) TILE FLOOR, SLOPE TO DRAIN. TILE - DALTILE KEYSTONES MOSAIC COLOR BODY PORCELAIN - UPTOWN TAUPE SPECKLE D202 W/ UPTOWN TAUPE D132
09 (N) FLOOR DRAIN.
10 NOT USED.
11 BUILD UP ASPHALT FOR LEVEL LANDING AT DOOR
12 BUILD UP ASPHALT PAVING WITH SLOPE 1:20 MAX
13 (E) CLERESTORY WINDOW IN CONCRETE WALL TO REMAIN, S.M.D. FOR NEW EXHAUST FAN
14 (N) ACCESSIBILITY SIGNAGE ON DOOR SEE 1/A0.1
15 (N) ACCESSIBILITY ROOM DESIGNATION
16 (N) FLOOR DRAIN IN (E) LOCATION, S.P.D.
17 30" x 48" CLR. FLOOR SPACE
18 5'-0" Ø TURNING RADIUS
19 PATCH WALL W/SALVAGED SIDING
20 (N) PAINT AT BATHROOM EXTERIOR WALLS, COLOR TBD
21 (N) HOSE CONNECTION W/ SLOPED CONC. PAD. S.P.D., CONFIRM LOCATION WITH ENGINEER PRIOR TO CORING THE CONC. SLAB
22 (N) CONC. CURB. S.S.D. & S.P.D.

2/A1 PIER 29 PROPOSED BATHROOM FLOOR PLAN
SCALE: 1/4" = 1'-0"

NO.	DATE	DESCRIPTION	BY	APP.

TABLE OF REVISIONS
CHECK WITH TRACING TO SEE IF YOU HAVE LATEST REVISION

REFERENCE INFORMATION & FILE NO. OF SURVEYS

SAN FRANCISCO PORT COMMISSION
PORT OF SAN FRANCISCO
DEPARTMENT OF ENGINEERING

DESIGNED: MT	DATE:
DRAWN: JG/MT	DATE:
CHECKED: MT	DATE: 11/27/12

APPROVED BY SAN FRANCISCO PORT COMMISSION
DATE: _____
CHIEF HARBOR ENGINEER

SCALE: AS NOTED
SHEET OF SHEETS

PIER 29
RESTROOM REMODEL

DEMOLITION, CONSTRUCTION AND REFLECTED CEILING PLANS

CONTRACT NO.
DRAWING NO. A1.0
FILE NO. XXXX-29-S
REV. NO.

VIEW: PLOT1

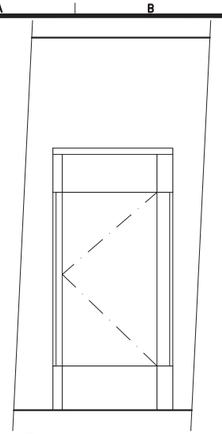

5 A2 BATH. INT. ELEV.
SCALE: 1/2" = 1'-0"

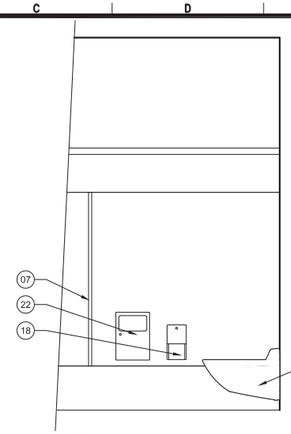

6 A2 BATH. INT. ELEV.
SCALE: 1/2" = 1'-0"

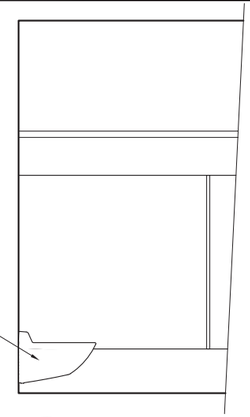

7 A2 BATH. INT. ELEV.
SCALE: 1/2" = 1'-0"

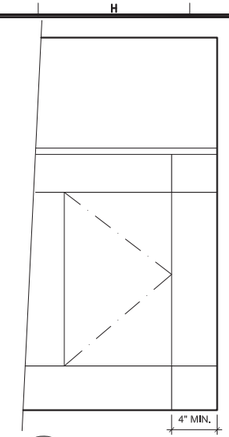

8 A2 BATH. INT. ELEV.
SCALE: 1/2" = 1'-0"

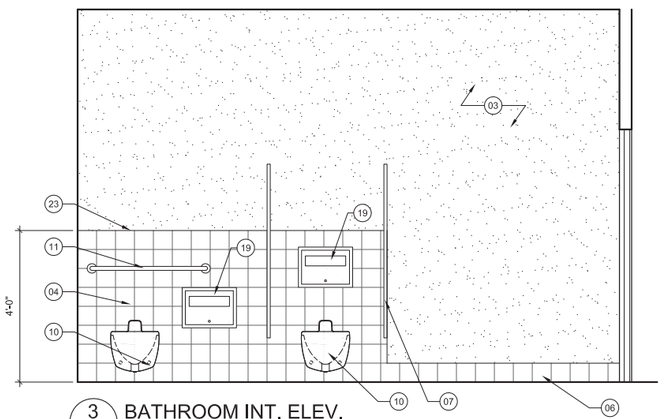

3 A2 BATH. INT. ELEV.
SCALE: 1/2" = 1'-0"

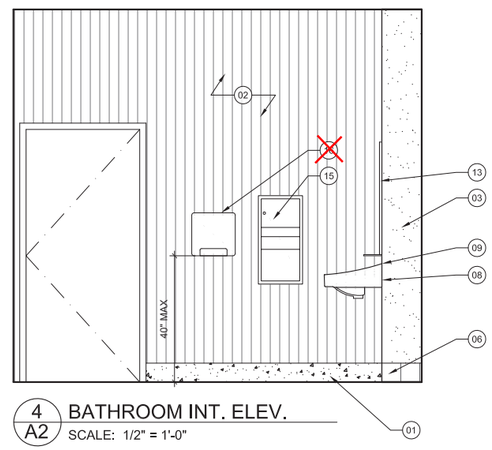

4 A2 BATH. INT. ELEV.
SCALE: 1/2" = 1'-0"

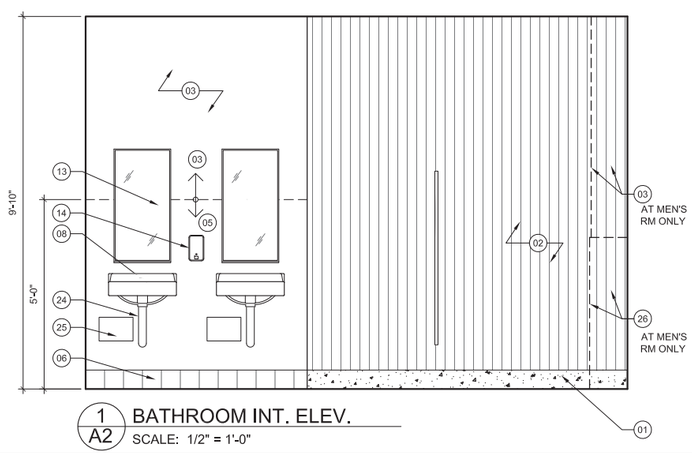

1 A2 BATH. INT. ELEV.
SCALE: 1/2" = 1'-0"

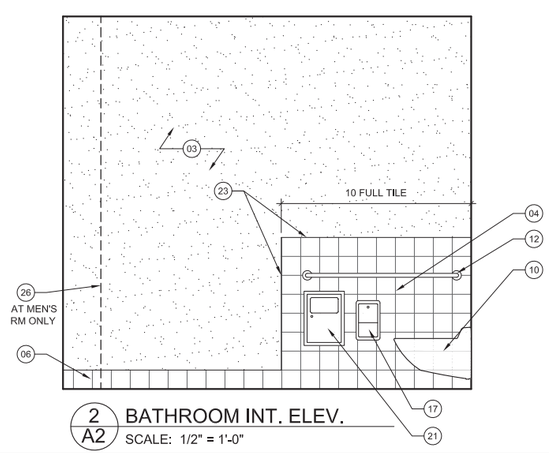

2 A2 BATH. INT. ELEV.
SCALE: 1/2" = 1'-0"

Michael Tauber Architecture
2325 Third Street, Ste 322
San Francisco, CA 94107
p. 415.252.7044

Creegan+D'Angelo INFRASTRUCTURE ENGINEERS
170 Columbus Ave., Suite 240
San Francisco, CA 94133
Tel (415) 834-2010
Fax (415) 834-2011
www.cdengineers.com

LICENSED ARCHITECT
MICHAEL TAUBER
C 25947
12.31.2013
Renewal Date
STATE OF CALIFORNIA

GENERAL NOTES

1. SEE PLUMBING DRAWINGS FOR PLUMBING FIXTURES.
2. SEE ELECTRICAL DRAWINGS FOR LIGHTING & ELECTRICAL.
3. REFER TO SHT A0.1 FOR MOUNTING HTS. AND ACCESSIBILITY STANDARDS.
4. PROVIDE 3'-0" X 3'-0" BRUSHOUT OF PAINT ON WALL FOR ARCHITECT APPROVAL PRIOR TO COMMENCING PAINTING.
5. PROVIDE SUBMITTALS FOR TOILET PARTITIONS, DOORS, HARDWARE, TOILET FIXTURES, AND ACCESSORIES PRIOR TO ORDERING.
6. PROVIDE LEVEL 4 FINISH FOR ALL NEW WALL BOARD FINISHES.

INTERIOR ELEVATION KEY NOTES

01 (E) CONCRETE CURB

02 (E) WOOD PANELING, PAINT, ICI 660, CORINTHEAN COLUMN, EGG SHELL FINISH

03 (N) PTD, GYP. BD., LEVEL 4 FINISH, PAINT - ICI 660 , CORINTHEAN COLUMN, EGGSHELL FINISH

04 TILE - DALTILE 6" x 6" FIELD TILE - ARCHITECTURAL GRAY 0109, INSTALL OVER FIBER CEMENT BACKER BOARD PER TCA DESIGN W244F-11.

05 WATER RESISTANT WALL BOARD - USG FIBERROCK AQUATOUCH INTERIOR PANELS OR EQ. PAINT PER NOTE 3.

06 TILE - DALTILE 6" x 6" COVE BASE - COLOR TO MATCH TILE WAINSCOTING ABOVE

07 (N) TOILET PARTITION - GLOBAL PARTITIONS FLOOR ANCHORED/OVERHEAD BRACED TOILET COMPARTMENTS, SOLID PLASTIC (HDPE), COLOR TO BE SELECTED BY ARCHITECT, TYP.

08 (N) WALL MOUNTED LAV, TYP., SEE 4/A0.1 FOR REQ'D CLEARANCES AND MTG. HTS.

09 (N) LAV FAUCET, TYP., S.P.D. AND 3/A0.1 FOR MTG HT

10 (N) WALL HUNG TOILET, S.P.D., 3/A0.1 FOR MTG. HT.

11 (N) 36" GRAB BAR, SEE 2/A0.1

12 (N) 42" GRAB BAR, SEE 2/A0.1

13 (N) MIRROR ~~WITH SHELF~~

14 (N) SOAP DISPENSER

15 (N) PAPER TOWEL DISPENSER/WASTE RECEPTACLE

~~16 (N) HAND DRYER~~

17 (N) TOILET TISSUE DISPENSER - RECESSED

18 (N) TOILET TISSUE DISPENSER - SURFACE MOUNTED

19 (N) TOILET SEAT COVER DISPENSER - RECESSED

20 NOT USED

21 (N) SANITARY NAPKIN DISPOSAL - RECESSED (WOMEN'S RESTROOM ONLY)

22 (N) SANITARY NAPKIN DISPOSAL - SURFACE MOUNTED (WOMEN'S RESTROOM ONLY)

23 DALTILE BULLNOSE 6x6 TILE, COLOR TO MATCH FIELD.

24 INSULATE P-TRAP, SEE 4/A0.1 FOR CLEARANCES.

25 INSTANT HOT WATER HEATER, S.P.D.

26 AT MEN'S ROOM 2 X 4 FURRED WALL TO CONCEAL DOWNSPOUT - PROVIDE FINISH AND MATERIAL PER NOTE 3.

BATHROOM ACCESSORY SCHEDULE

PLUMBING	MANUFACTURER/MODEL	COLOR/FIN	NOTES
MIRROR	BOBRICK B-292 1836 - MIRROR WITH STAINLESS STEEL ANGLE FRAME ~~AND SHELF~~		
SOAP DISPENSER	BOBRICK B-2111 - CLASSIC SERIES SURFACE-MOUNTED SOAP DISPENSER		
PAPER TOWEL DISPENSER/WASTE RECEPTACLE	BOBRICK B-369 - CLASSIC SERIES RECESSED PAPER TOWEL DISPENSER AND WASTE RECEPTACLE		
~~HAND DRYER~~	~~BOBRICK B-7128 - TRIMLINE SURFACE MOUNTED ADA DRYER~~	~~STAINLESS STL.~~	
36" GRAB BAR	BOBRICK B-5806x36 - 1-1/4" DIAMETER STAINLESS STEEL GRAB BARS WITH SNAP FLANGE		
42" GRAB BAR	BOBRICK B-5806x42 - 1-1/4" DIAMETER STAINLESS STEEL GRAB BARS WITH SNAP FLANGE		
TOILET SEAT COVER DISPENSER - RECESSED	BOBRICK B-301 - RECESSED TOILET SEAT COVER DISPENSER		
SANITARY NAPKIN DISPOSAL - RECESSED	BOBRICK B-353 - RECESSED SANITARY NAPKIN DISPOSAL		
SANITARY NAPKIN DISPOSAL - SURFACE MOUNTED	BOBRICK B-254 - SURFACE MOUNTED SANITARY NAPKIN DISPOSAL		
TOILET TISSUE DISPENSER - RECESSED	BOBRICK B-3888 - RECESSED MULTI-ROLL TOILET TISSUE DISPENSER		
TOILET TISSUE DISPENSER - SURFACE MOUNTED	BOBRICK B-4288 - SURFACE MOUNTED MULTI-ROLL TOILET TISSUE DISPENSER		

NO.	DATE	DESCRIPTION	BY	APP.

TABLE OF REVISIONS
CHECK WITH TRACING TO SEE IF YOU HAVE LATEST REVISION

REFERENCE INFORMATION & FILE NO. OF SURVEYS

SAN FRANCISCO PORT COMMISSION
PORT OF SAN FRANCISCO
DEPARTMENT OF ENGINEERING

MT 9.7.12
MT 9.7.12
AS NOTED
A1

DESIGNED: MT DATE:
DRAWN: JG/MT DATE:
CHECKED: MT DATE: 11/27/12

APPROVED BY SAN FRANCISCO PORT COMMISSION
DATE: _____
CHIEF HARBOR ENGINEER

SCALE: AS NOTED
SHEET OF SHEETS

PIER 29
RESTROOM REMODEL

INTERIOR ELEVATIONS

CONTRACT NO.
DRAWING NO. A2.0
FILE NO. XXXX-29-S
REV. NO.

VIEW: PLOT1

Michael Tauber Architecture
2325 Third Street, Ste 322
San Francisco, CA 94107
p. 415.252.7044

Creegan+D'Angelo
INFRASTRUCTURE ENGINEERS
170 Columbus Ave., Suite 240
San Francisco, CA 94133
Tel (415) 834-2010
Fax (415) 834-2011
www.cdengineers.com

LICENSED ARCHITECT
MICHAEL TAUBER
C 25947
12.31.2013
Renewal Date
STATE OF CALIFORNIA

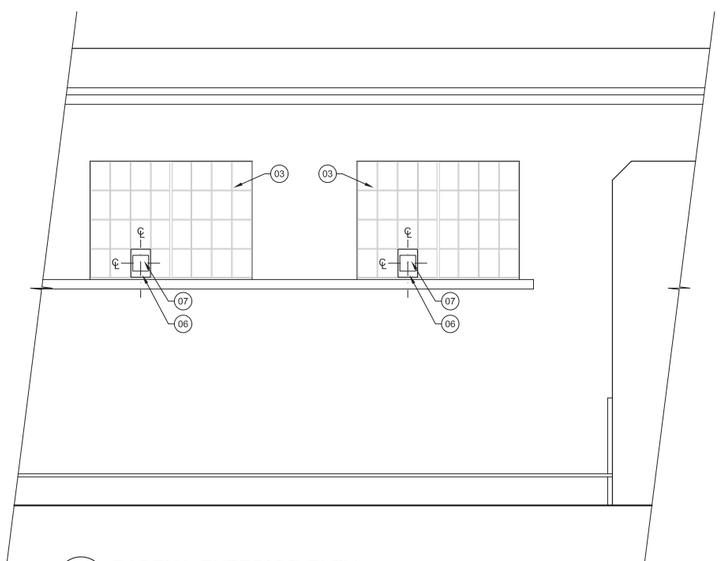

1 / A3 PARTIAL EXTERIOR ELEV.
SCALE: 1/4" = 1'-0"

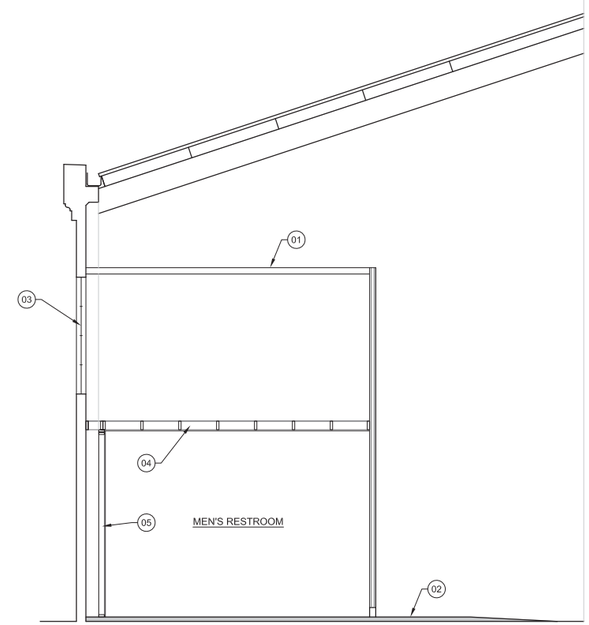

2 / A3 SECTION THROUGH BATHROOM
SCALE: 1/4" = 1'-0"

KEY NOTES

01 EXISTING OPEN CEILING FRAMING

02 NEW AC PAVING - FOR LEVEL LANDING AT DOORS

03 (E) STEEL SASH WINDOW SYSTEM W/ +/- 1'-5" TALL x 1'-0" WIDE WINDOW PANES

04 (N) CEILING STRUCTURE , S.S.D.

05 (N) FURRED OUT 2x4 STUD WALL

06 PROVIDE PTD. GSM ENCLOSURE, PUTTY INTO (E) SASH OPENING

07 EXHAUST FAN WALL CAP, S.M.D.

NO.	DATE	DESCRIPTION	BY	APP.

TABLE OF REVISIONS
CHECK WITH TRACING TO SEE IF YOU HAVE LATEST REVISION

REFERENCE INFORMATION & FILE NO. OF SURVEYS

SAN FRANCISCO PORT COMMISSION
PORT OF SAN FRANCISCO
DEPARTMENT OF ENGINEERING

DESIGNED: MT DATE:
DRAWN: JG/MT DATE:
CHECKED: MT DATE: 11/27/12

APPROVED BY SAN FRANCISCO PORT COMMISSION
DATE: _____
CHIEF HARBOR ENGINEER

SCALE: AS NOTED
SHEET OF SHEETS

PIER 29
RESTROOM REMODEL

EXTERIOR ELEVATION AND SECTION

CONTRACT NO.
DRAWING NO. A3.0
FILE NO. XXXX-29-S
REV. NO.

VIEW: PLOT1

Creegan+D'Angelo
INFRASTRUCTURE ENGINEERS
170 Columbus Ave., Suite 240
San Francisco, CA 94133
Tel (415) 834-2010
Fax (415) 834-2011
www.cdengineers.com

REGISTERED PROFESSIONAL ENGINEER
DEAN R. SEDLACHEK
NO. C74932
EXP. 12/31/13
CIVIL
STATE OF CALIFORNIA

STRUCTURAL DESIGN CRITERIA

PROJECT DESCRIPTION
CODE UPGRADES TO EXISTING BATHROOM.

LIMITATIONS
THE STRUCTURAL DESIGN OF THE BUILDING COMPONENTS DESCRIBED IN THESE DRAWINGS IS BASED ON THE 2010 PORT OF SAN FRANCISCO BUILDING CODE WITH THE FOLLOWING LIMITATIONS:

1. DESIGN BASIS FOR STRUCTURAL

DESIGN LOADS

LIVE LOAD, CEILING.....10 PSF
DEAD LOAD, CEILING.....20 PSF
MECHANICAL EQUIPMENT (EXHAUST FANS, EACH).....50 LBS

GENERAL

1. CONTRACTOR SHALL VERIFY ALL DIMENSIONS, ELEVATIONS, AND CONDITIONS OF THE SITE AND EXISTING CONDITIONS PRIOR TO COMMENCING CONSTRUCTION. IF THERE ARE ANY DISCREPANCIES BETWEEN THE EXISTING CONDITIONS AND THESE DRAWINGS AND SPECIFICATIONS, THE CONTRACTOR SHALL NOTIFY THE OWNER IMMEDIATELY IN WRITING. IN NO CASE SHALL DIMENSIONS BE SCALED FROM PLANS, SECTIONS OR DETAILS ON THESE DRAWINGS.

ALL CONSTRUCTION SHALL BE IN ACCORDANCE WITH THE 2010 PORT OF SAN FRANCISCO BUILDING CODE.

2. ALL OMISSIONS AND CONFLICTS BETWEEN THE VARIOUS ELEMENTS OF THE WORKING DRAWINGS AND/OR SPECIFICATIONS SHALL BE BROUGHT TO THE ATTENTION OF THE ENGINEER BEFORE PROCEEDING WITH ANY WORK SO INVOLVED.

3. THE CONTRACTOR SHALL LOCATE AND PROTECT ALL EXISTING UTILITY LINES AND CONNECTIONS INCLUDING SEWER, WATER, GAS, AND ELECTRIC SERVICES BEFORE AND DURING HIS WORK.

4. WHERE A CONSTRUCTION DETAIL IS NOT SHOWN OR NOTED, THE DETAIL SHALL BE THE SAME AS FOR OTHER SIMILAR WORK.

5. NO PIPES, DUCTS, SLEEVES, CHASES, ETC., SHALL BE PLACED IN SLABS, BEAMS, OR WALLS UNLESS SPECIFICALLY SHOWN OR NOTED, NOR SHALL ANY STRUCTURAL MEMBER BE CUT FOR PIPES, DUCTS, ETC., UNLESS OTHERWISE NOTED. CONTRACTOR SHALL OBTAIN PRIOR APPROVAL FOR INSTALLATION OF ANY ADDITIONAL PIPES, DUCTS, ETC.

6. CONTRACTOR SHALL TAKE PRECAUTIONARY MEASURES TO ENSURE THAT ALL PROPERTY IS PROTECTED DURING THIS OPERATION. ANY DAMAGE OR CHANGED CONDITIONS SHALL BE REPAIRED AND RESTORED TO A CONDITION EQUAL TO THAT EXISTING AT THE COMMENCEMENT OF THE WORK. CONTRACTOR SHALL RESTORE ANY DAMAGE AT HIS OWN EXPENSE.

7. SUBMIT REQUESTS FOR MODIFICATIONS TO THE CONTRACT DOCUMENTS IN WRITING. SHOP DRAWINGS SUBMITTED FOR REVIEW DO NOT CONSTITUTE "REQUEST IN WRITING" UNLESS IT IS CLEARLY NOTED THAT SPECIFIC CHANGES ARE BEING REQUESTED.

8. DISCOVERY AND MANAGEMENT OF HAZARDOUS MATERIALS IN EXISTING CONSTRUCTION IS THE RESPONSIBILITY OF THE CONTRACTOR. THE DESIGNER HAS NOT PERFORMED INVESTIGATIONS TO DETERMINE THE PRESENCE OF HAZARDOUS MATERIALS. IF HAZARDOUS MATERIALS ARE DISCOVERED, THE CONTRACTOR SHALL IMMEDIATELY NOTIFY THE OWNER AND CEASE WORK UNTIL CONDITIONS CAN BE MAINTAINED IN COMPLIANCE WITH ALL APPLICABLE REGULATIONS. THE CONTRACTOR IS RESPONSIBLE FOR ENSURING THAT PERSONNEL WITHIN THE WORK AREA ARE PROTETED FROM EXPOSURE TO HAZARDOUS MATERIALS.

EXISTING UTILITIES

1. THE CONTRACTOR SHALL NOTIFY THE PORT PRIOR TO REPLACING ANY UTILITY THAT IS NOT IN KIND OR IN PLACE.

2. THE CONTRACTOR SHALL PROVIDE AS-BUILT DRAWINGS TO THE PORT FOR ALL UTILITIES REPLACED AND/OR MODIFIED IN THE PROJECT.

SPECIAL INSPECTIONS

1. IN ADDITION TO THE INSPECTIONS REQUIRED BY CBC SECTION 108, A "SPECIAL" INSPECTOR, EMPLOYED BY THE OWNER, SHALL OBSERVE THE WORK LISTED BELOW FOR CONFORMANCE WITH THESE PLANS AND SPECIFICATIONS. SPECIAL INSPECTIONS SHALL BE "CONTINUOUS" UNLESS NOTED AS "PERIODIC".

2. THE SPECIAL INSPECTOR SHALL BE APPROVED BY THE BUILDING OFFICIAL AND QUALIFIED TO PERFORM INSPECTIONS OF THE PARTICULAR TYPE OF CONSTRUCTION OR OPERATION.

3. THE SPECIAL INSPECTOR SHALL FURNISH INSPECTION REPORTS TO THE BUILDING OFFICIAL, ENGINEER, ARCHITECT, AND OWNER. ALL WORK IN NON-CONFORMANCE WITH THE PLANS AND SPECIFICATIONS SHALL BE BROUGHT TO THE IMMEDIATE ATTENTION OF THE CONTRACTOR FOR CORRECTION; THEN, IF UNCORRECTED, TO THE OWNER AND BUILDING OFFICIAL.

4. THE SPECIAL INSPECTOR SHALL SUBMIT A FINAL SIGNED REPORT STATING WHETHER THE WORK REQUIRING SPECIAL INSPECTIONS WAS, TO THE BEST OF HIS KNOWLEDGE, IN CONFORMANCE WITH THE APPROVED PLANS AND SPECIFICATIONS AND THE APPLICABLE WORKMANSHIP PROVISIONS OF THE CBC.

5. THE FOLLOWING WORK REQUIRES SPECIAL INSPECTION IN ACCORDANCE WITH CHAPTER 17 OF THE CBC:

CONCRETE: DURING THE TAKING OF TEST SPECIMENS AND PLACING OF ALL CONCRETE.

CONCRETE FORMWORK: SHAPE, LOCATION AND DIMENSIONS OF THE CONCRETE MEMBER BEING FORMED SHALL BE PERIODICALLY INSPECTED.

EPOXIED DOWELS IN CONCRETE: THE SPECIAL INSPECTOR SHALL PROVIDE CONTINUOUS INSPECTION DURING DRILLING AND PREPARATION OF HOLES AND INSTALLATION OF EPOXIED DOWELS.

REINFORCING STEEL: THE SPECIAL INSPECTOR SHALL INSPECT ALL REINFORCEMENT IN-PLACE FOR CONFORMANCE WITH THE APPROVED PLANS PRIOR TO CLOSING OF FORMS OR DELIVERY OF CONCRETE TO THE JOBSITE.

TESTING

1. ALL TESTING SHALL BE PERFORMED BY AN APPROVED TESTING LABORATORY, EMPLOYED BY THE OWNER AND SHALL BE DONE IN ACCORDANCE WITH APPLICABLE PROVISIONS OF THE CALIFORNIA BUILDING CODE AND INDICATED PROVISIONS OF THE CBC STANDARDS AND ASTM STANDARDS. COSTS OF REQUIRED RETESTING SHALL BE PAID FOR BY THE CONTRACTOR.

2. TEST REPORTS SHALL BE FURNISHED TO THE BUILDING DEPARTMENT, OWNER, ARCHITECT, AND ENGINEER FOR ALL TESTING. TEST RESULTS NOT IN CONFORMANCE WITH THE PLANS AND SPECIFICATIONS SHALL BE BROUGHT TO THE IMMEDIATE ATTENTION OF THE OWNER AND CLEARLY IDENTIFIED IN THE TEST REPORTS.

3. THE FOLLOWING WORK REQUIRES TESTING:

CONCRETE: THREE COMPRESSION CYLINDERS PER DAY PER 100 C.Y. TEST ONE CYLINDER AT 7 DAYS, ONE AT 28 DAYS, AND KEEP ONE AS SPARE.

EPOXIED DOWELS IN CONCRETE: IF THE SPECIAL INSPECTOR HAS BEEN PRESENT DURING THE PREPARATION AND INSTALLATION OF EPOXY DOWELS, NO PULL TESTING IS REQUIRED.

STRUCTURAL OBSERVATIONS

STRUCTURAL OBSERVATIONS, AS REQUIRED BY SECTION 1709, WILL BE UNDERTAKEN BY PERSONNEL UNDER THE SUPERVISION OF THE ENGINEER OF RECORD. STRUCTURAL OBSERVATIONS ARE SEPARATE FROM THE SPECIAL INSPECTIONS OUTLINED ABOVE.

THE PURPOSE OF THE STRUCTURAL OBSERVATIONS IS TO REVIEW THE OVERALL PROGRESS OF THE CONSTRUCTION AND ASCERTAIN ITS GENERAL COMPLIANCE WITH THE CONSTRUCTION DOCUMENTS, THESE GENERAL NOTES, AND OTHER SPECIFICATIONS WHERE APPLICABLE. OBSERVATIONS WILL BE NOTED IN REGULAR SITE REPORTS ISSUED TO, AT A MINIMUM, THE OWNER, GENERAL CONTRACTOR, AND BUILDING OFFICIAL.

UNLESS OTHERWISE AGREED UPON, THE ENGINEER OF RECORD WILL BE ENGAGED TO PROVIDE, AT A MINIMUM, A LEVEL OF CONSTRUCTION INVOLVEMENT NEEDED TO OBSERVE THE FOLLOWING CONSTRUCTION MILESTONES DURING THE CONSTRUCTION PROCESS:

- CONSTRUCTION OF WOOD-FRAMED WALLS, CEILINGS AND HARDWARE

THE CONTRACTOR SHALL NOTIFY THE ENGINEER A MINIMUM OF 2 DAYS PRIOR TO TIME OF OBSERVATION.

CAST-IN-PLACE CONCRETE

MATERIALS:

1. CEMENT SHALL CONFORM TO ASTM C 150, TYPE I OR TYPE II.

2. AGGREGATES FOR NORMAL WEIGHT CONCRETE SHALL CONFORM TO ASTM C 33. MAXIMUM SIZE OF AGGREGATE SHALL BE ¾".

3. AGGREGATES FOR LIGHTWEIGHT CONCRETE SHALL CONFORM TO ASTM C 330.

4. READY-MIX CONCRETE SHALL BE MIXED AND DELIVERED IN ACCORDANCE WITH ASTM C 94. SUBMIT AND OBTAIN APPROVAL OF ALL MIX DESIGNS PRIOR TO PLACING CONCRETE.

5. CONCRETE MIXES SHALL HAVE THE FOLLOWING PROPERTIES:

APPLICATION	DESIGN STRENGTH (1)	CEMENT CONTENT (2)	MAX. AGG. (3)	W/C RATIO (4)	MAX. SLUMP (5)
SLABS, CURBS, SIDEWALKS	4,000	585	¾"	0.45	3

NOTES: (1)MINIMUM 28 DAY COMPRESSIVE STRENGTH, PSI; (2)MINIMUM CEMENT CONTENT IN POUNDS PER CUBIC YARD OF CONCRETE; (3)MAXIMUM COARSE AGGREGATE SIZE IN INCHES; (4)MAXIMUM WATER-CEMENT RATIO; (5)SLUMP INCHES.

6. ADMIXTURES SHALL COMPLY WITH ASTM C 494 AND BE OF A TYPE THAT INCREASES THE WORKABILITY OF THE CONCRETE BUT SHALL NOT BE CONSIDERED TO REDUCE THE SPECIFIED MINIMUM CEMENT CONTENT. (CALCIUM CHLORIDE SHALL NOT BE USED.)

7. BAR REINFORCEMENT SHALL BE ASTM A615, GRADE 60, UNLESS OTHERWISE NOTED.

EXECUTION:

1. CONCRETE WORK SHALL CONFORM TO REQUIREMENTS OF ACI 304 – "RECOMMENDED PRACTICE FOR MEASURING, MIXING, TRANSPORTING, AND PLACING CONCRETE".

2. REFER TO STRUCTURAL DRAWINGS AND DRAWINGS OF OTHER DISCIPLINES FOR MOLDS, GROOVES, ORNAMENTS, CLIPS, ANCHORS, INSERTS, OR GROUNDS REQUIRED TO BE CAST INTO CONCRETE.

3. NO CONDUIT PLACED IN A CONCRETE SLAB SHALL HAVE AN OUTSIDE DIAMETER GREATER THAN 1/3 THE THICKNESS OF THE SLAB. NO CONDUIT SHALL BE EMBEDDED IN A SLAB THAT IS LESS THAN 5" THICK. EXCEPT FOR LOCAL OFFSETS, MIN. CLEAR DISTANCE BETWEEN CONDUITS SHALL BE 6".

4. NO CONDUIT SHALL BE PLACED IN THE CONCRETE TOPPING OVER THE STEEL DECKING WITHOUT PRIOR APPROVAL OF THE ENGINEER.

5. PROJECTING CORNERS OF SLABS, BEAMS, WALLS, COLUMNS, ETC., SHALL BE FORMED WITH A 3/4" CHAMFER UNLESS OTHERWISE NOTED.

6. DESIGN AND CONSTRUCTION OF FORMWORK SHALL BE THE RESPONSIBILITY OF THE CONTRACTOR AND SHALL BE PERFORMED IN ACCORDANCE WITH ACI 347- "RECOMMENDED PRACTICE FOR CONCRETE FORMWORK".

7. FORMS MAY BE REMOVED WHEN FIELD-CURED CYLINDERS ACHIEVE 75% OF THE SPECIFIED 28-DAY STRENGTH, BUT NOT SOONER THAN THE TIMES INDICATED IN ACI 347. IT SHALL BE THE RESPONSIBILITY OF THE CONTRACTOR TO MAKE AND PAY FOR THE COSTS OF ANY SUPPLEMENTAL STRENGTH TESTS.

8. UNLESS OTHERWISE NOTED, CONCRETE FLOORS SHALL BE SCREEDED TO AN EVEN PLANE, FLOATED, AND STEEL-TROWELED TO A SMOOTH FINISH. PROVIDE JOINTS AS SHOWN ON THE DRAWINGS.

9. ALL CONCRETE SHALL BE THOROUGHLY COMPACTED BY A MECHANICAL VIBRATOR DURING THE OPERATION OF PLACING AND SHALL BE THOROUGHLY WORKED AROUND REINFORCEMENT AND EMBEDDED FIXTURES AND INTO CORNERS OF FORMS.

STRUCTURAL WOOD

MATERIALS:

1. FRAMING LUMBER SHALL BE DOUGLAS FIR-LARCH (UON), GRADE STAMPED BY A RECOGNIZED GRADING AGENCY (W.C.L.I.B. OR W.W.P.A.). FURNISH THE FOLLOWING UNLESS OTHERWISE NOTED:

A) FOR HORIZONTAL MEMBERS:
JOISTS & RAFTERS.....GRADE #2 OR BETTER
LEDGERS AND HEADERS.....GRADE #1 OR BETTER

B) FOR VERTICAL MEMBERS:
2x STUDS TO 8'-0" LONG.....STUD GRADE
2x STUDS 8'-1" TO 14"-0".....GRADE #2
OTHER STUDS.....GRADE #2

2. STRUCTURAL NAILS SHALL BE COMMON WIRE TYPE (UON).

3. ALL FRAMING HARDWARE AND CONNECTORS SHALL BE AS MANUFACTURED BY SIMPSON STRONG-TIE COMPANY, INC. OR APPROVED EQUAL. PROVIDE ALL FASTENERS AND ANCHORAGES WITH A HOT-DIP ZINC COATING, UNLESS OTHERWISE NOTED. INSTALLATION SHALL CONFORM TO MANUFACTURERS RECOMMENDATIONS. WHEN FASTENERS ARE IN CONTACT WITH PRESSURE-TREATED WOOD, THE CONTRACTOR SHALL OBTAIN FROM THE MANUFACTURER THE SPECIFIC TYPE OF WOOD TREATMENT AND CHEMICAL RETENTION LEVELS BEING USED. SUBMIT THE CHEMICAL TREATMENT CERTIFICATION DATA TO THE ENGINEER. BASED UPON THIS INFORMATION, THE ENGINEER SHALL DETERMINE WHETHER HOT-DIPPED GALVANIZED OR STAINLESS STEEL CONNECTORS SHOULD BE USED. IN THE ABSENCE OF SUCH INFORMATION, STAINLESS STEEL CONNECTORS SHOULD BE USED.

4. ALL HARDWARE AND FASTENERS SHALL BE HOT-DIP GALVANIZED OR 304 STAINLESS STEEL.

5. HOT-DIP GALVANIZED HARDWARE SHALL CONFORM TO ASTM A123

6. HOT-DIP GALVANIZED FASTENERS SHALL CONFORM TO ASTM A153

7. PRESSURE TREATED WOOD SHALL BE USED FOR SILLS, FOUNDATION PLATES AND SLEEPERS, AND ALL WOOD IN CONTACT WITH CONCRETE OR MASONRY.

8. CONVENTIONAL FRAMING CONNECTIONS SHALL BE IN ACCORDANCE WITH TABLE 2304.9.1 OF THE 2010 CBC.

NO.	DATE	DESCRIPTION	BY	APP.
0	11/27/12	ISSUED FOR PERMIT	DS	RL

TABLE OF REVISIONS
CHECK WITH TRACING TO SEE IF YOU HAVE LATEST REVISION

REFERENCE INFORMATION & FILE NO. OF SURVEYS

PORT OF SAN FRANCISCO

SAN FRANCISCO PORT COMMISSION
PORT OF SAN FRANCISCO
DEPARTMENT OF ENGINEERING

DESIGNED: DATE: C+D 11/27/12
DRAWN: DATE: C+D 11/27/12
CHECKED: DATE: DS 11/27/12

APPROVED BY SAN FRANCISCO PORT COMMISSION
DATE: _____
_____ CHIEF HARBOR ENGINEER

SCALE: AS NOTED
SHEET OF SHEETS

PIER 29
RESTROOM REMODEL

GENERAL NOTES

CONTRACT NO.
DRAWING NO. S1.0
FILE NO. XXXX-29-S
REV. NO.

Creegan+D'Angelo
INFRASTRUCTURE ENGINEERS
170 Columbus Ave., Suite 240
San Francisco, CA 94133
Tel (415) 834-2010
Fax (415) 834-2011
www.cdengineers.com

REGISTERED PROFESSIONAL ENGINEER
DEAN R. SEDLACHEK
NO. C74932
EXP. 12/31/13
CIVIL
STATE OF CALIFORNIA

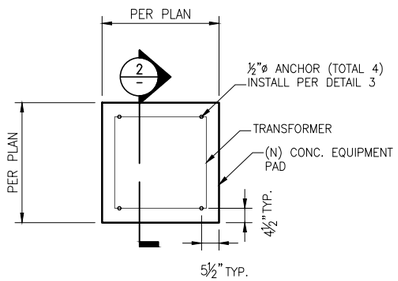

PLAN

TRANSFORMER PAD 1
1/2"=1'-0"
TLA ANCHOR DETAIL

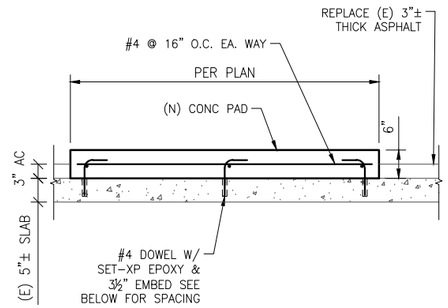

DOWEL SPACING:
TRANSFORMER PAD – DOWELS AT 16" O.C. EACH WAY (9 TOTAL PER PAD)

TYP PAD SECTION 2
3/4"=1'-0"
TYP PAD

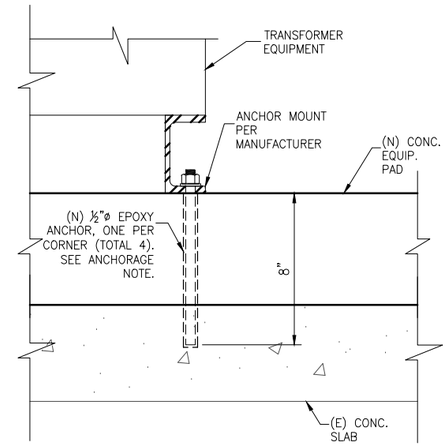

TYPICAL ANCHOR DETAIL 3
3"=1'-0"
EPOXY ANCHOR DETAIL

ANCHORAGE NOTES:

INSTALL ANCHORS AS SHOWN USING SIMPSON SET-XP EPOXY ADHESIVE PER ICC EVALUATION REPORT ESR-2508.

ANCHOR ROD SHALL BE ASTM F1554 GR 36.

PROVIDE SPECIAL INSPECTION PER PORT CODE PROCEDURE FORM PCP-14.

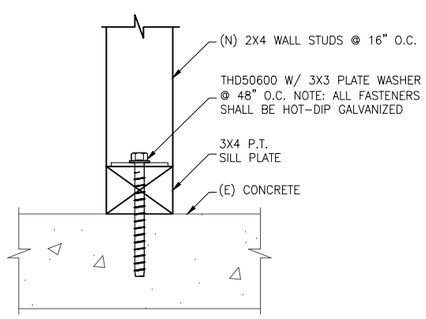

TYP. SILL DETAIL 4
3"=1'-0"
SILL DETAIL

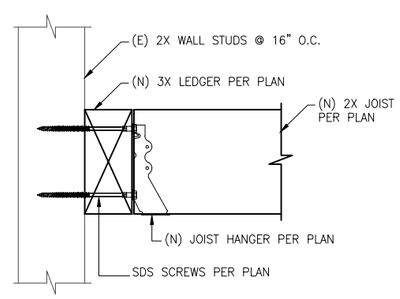

TYP. LEDGER DETAIL 5
3"=1'-0"
LEDGER DETAIL

NO.	DATE	DESCRIPTION	BY	APP.
0	11/27/12	ISSUED FOR PERMIT	DS	RL

TABLE OF REVISIONS
CHECK WITH TRACING TO SEE IF YOU HAVE LATEST REVISION

REFERENCE INFORMATION & FILE NO. OF SURVEYS

PORT OF SAN FRANCISCO

SAN FRANCISCO PORT COMMISSION
PORT OF SAN FRANCISCO
DEPARTMENT OF ENGINEERING

DESIGNED: C+D DATE: 11/27/12
DRAWN: C+D DATE: 11/27/12
CHECKED: DS DATE: 11/27/12

APPROVED BY SAN FRANCISCO PORT COMMISSION
DATE: _____
_____ CHIEF HARBOR ENGINEER

SCALE: AS NOTED
SHEET OF SHEETS

PIER 29
RESTROOM REMODEL

DETAILS

CONTRACT NO.
DRAWING NO. S3.0
FILE NO. XXXX-29-S
REV. NO.

Creegan+D'Angelo
INFRASTRUCTURE ENGINEERS
170 Columbus Ave., Suite 240
San Francisco, CA 94133
Tel (415) 834-2010
Fax (415) 834-2011
www.cdengineers.com

PROFESSIONAL ENGINEER
DEAN R. SEDLACHEK
NO. C74932
EXP. 12/31/13
CIVIL
STATE OF CALIFORNIA

LEGEND

1. INDICATES (E) STUD WALL
2. INDICATES (N) 2X4 STUD WALL
3. INDICATES (N) 3X6 LEDGER W/ (2)SDS25500 EA. STUD
4. INDICATES 2X6 JOIST IN HANGER
   HANGERS: LUS26 HDG (HOT-DIP GALVANIZED)
5. INDICATES DBL 2X6 JOIST IN HANGER
   HANGERS: LUS26-2 HDG
6. INDICATES (N) ELECTRICAL GEAR
   SUPPORTED BY UNISTRUT P1000HS HG
   ANCHOR TO TIMBER FRAMING W/ SDS25212 @ 8" O.C.

(1) FRAME AROUND CEILING ACCESS DOOR, SEE ARCHITECTURAL DRAWINGS
(2) FRAME AROUND EXHAUST FAN OPENING, SEE MECHANICAL DRAWINGS
(3) FRAME AROUND LIGHT OPENING, SEE ELECTRICAL DRAWINGS

NOTE: PROVIDE DOUBLE 2X FRAMING AROUND OPENINGS, TYPICAL

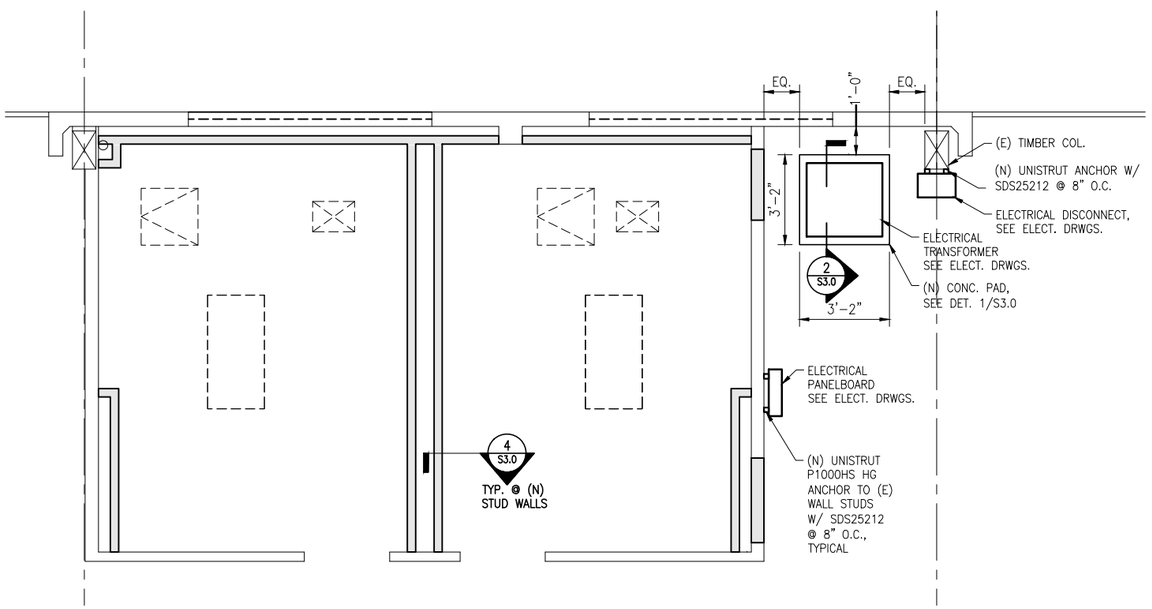

FLOOR PLAN 1
3/8" = 1'-0"
CADDFILE

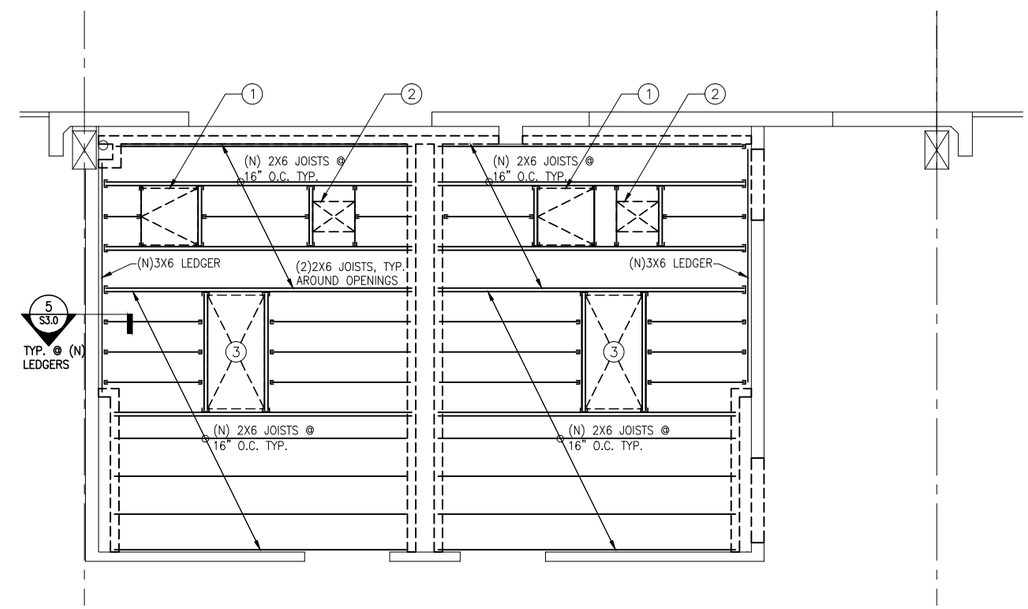

CEILING FRAMING PLAN 2
3/8" = 1'-0"
CADDFILE

NO.	DATE	DESCRIPTION	BY	APP.
0	11/27/12	ISSUED FOR PERMIT	DS	RL

TABLE OF REVISIONS
CHECK WITH TRACING TO SEE IF YOU HAVE LATEST REVISION

REFERENCE INFORMATION & FILE NO. OF SURVEYS

SAN FRANCISCO PORT COMMISSION
PORT OF SAN FRANCISCO
DEPARTMENT OF ENGINEERING

DESIGNED: C+D DATE: 11/27/12
DRAWN: C+D DATE: 11/27/12
CHECKED: DS DATE: 11/27/12

APPROVED BY SAN FRANCISCO PORT COMMISSION
DATE: _____
CHIEF HARBOR ENGINEER

SCALE: AS NOTED
SHEET OF SHEETS

PIER 29
RESTROOM REMODEL

PLANS

CONTRACT NO.
DRAWING NO. S2.0
FILE NO. XXXX-29-S
REV. NO.

Creegan+D'Angelo
INFRASTRUCTURE ENGINEERS
170 Columbus Ave., Suite 240
San Francisco, CA 94133
Tel (415) 834-2010
Fax (415) 834-2011
www.cdengineers.com

YEI ENGINEERS, INC.
7700 Edgewater Drive, Suite 128, Oakland, CA 94621
Phone: (510) 383-1050 Fax: (510) 383-1057

REGISTERED PROFESSIONAL ENGINEER
PATRICK R. MALLILIN
NO. M 30258
EXP. 06/30/13
MECHANICAL
STATE OF CALIFORNIA

GENERAL NOTES:

1. MECHANICAL CONTRACTOR SHALL BE RESPONSIBLE FOR FINAL VERIFICATION AND COORDINATION OF EXISTING CONDITIONS AND ALL OTHER TRADES. VERIFY ALL EXISTING CONDITIONS IN THE FIELD PRIOR TO PURCHASING EQUIPMENT. ADVISE THE PORT IN WRITING IN THE EVENT A CONFLICT OCCURS BETWEEN THE REQUIREMENTS OF THE CONTRACT DOCUMENTS AND ACTUAL FIELD CONDITIONS. THE CONTRACTOR SHALL BEAR ALL COSTS FOR RELOCATION OF EQUIPMENT, PIPING, ETC., FROM FAILURE TO PROPERLY COORDINATE INSTALLATIONS AND ADVISE OF THE CONFLICT IN WRITING PRIOR TO INSTALLATION.
2. IN CASE OF DIFFERENCE BETWEEN BUILDING CODES, SPECIFICATIONS, INDUSTRY STANDARDS, UTILITY COMPANY REGULATIONS, FIRE INSURANCE CARRIER'S REQUIREMENTS AND CONTRACT DOCUMENTS, THE MOST STRINGENT SHALL GOVERN. PROMPTLY NOTIFY THE PORT IN WRITING OF ANY SUCH DIFFERENCE.
3. DUCTWORK AS SHOWN ON DRAWINGS ARE SCHEMATIC AND SHALL BE FABRICATED AND INSTALLED ON ACTUAL FIELD MEASUREMENT. DO NOT SCALE DRAWINGS FOR EXACT LOCATION OF DUCTWORK. COORDINATE WITH OTHER TRADES AS REQUIRED.
4. PLANS ARE BASED ON ANTICIPATED EQUIPMENT SIZE AND CONFIGURATION. CONTRACTOR SHALL MODIFY ARRANGEMENT TO SUIT ACTUAL PURCHASED EQUIPMENT AS REQUIRED FOLLOWING THE CRITERIA ESTABLISHED BY THESE PLANS. DEPARTURES FROM THE CONTRACT DRAWING RESULTING FROM CHANGES IN EQUIPMENT SIZES AND CONFIGURATIONS, OR RE–ARRANGEMENTS TO ACCOMMODATE FIELD CONDITIONS SHALL BE SUBMITTED IN DETAIL FOR PORT'S APPROVAL.
5. CONTRACTOR SHALL BE RESPONSIBLE FOR PROTECTION AND SHALL REPAIR ADJACENT EXISTING AND/OR NEW SURFACES, AREAS AND PROPERTY THAT MAY BE DAMAGED AS A RESULT OF ANY DEMOLITION AND/OR NEW WORK.
6. CONFORM TO LATEST NFPA 90A "STANDARD FOR THE INSTALLATION OF AIR CONDITIONING AND VENTILATION SYSTEMS".
7. ALL DUCTWORK AND ITS INSTALLATION SHALL BE IN ACCORDANCE WITH MANUFACTURERS' INSTRUCTION.
8. DUCT SIZES SHOWN ARE MINIMUM INSIDE DIMENSION.
9. EXACT LOCATION OF GRILLES, DIFFUSERS, REGISTERS AND ACCESS PANELS SHALL BE COORDINATED WITH THE ARCHITECTURAL REFLECTED CEILING PLAN. COORDINATE GRILLES, DIFFUSERS AND REGISTERS WITH CEILING SUPPORT MEMBERS.
10. PROVIDE READILY VISIBLE NON–FUSIBLE DISCONNECT SWITCHES FOR ALL NEW EQUIPMENT. COORDINATE WITH OTHER TRADES.
11. ALL MECHANICAL EQUIPMENT SHALL BE BRACED OR ANCHORED TO RESIST A HORIZONTAL FORCE ACTING IN ANY DIRECTION USING THE FOLLOWING CRITERIA: THE TOTAL DESIGN LATERAL SEISMIC FORCE SHALL BE DETERMINED FROM CBC 1613A. FORCES SHALL BE APPLIED IN THE HORIZONTAL DIRECTIONS THAT WILL RESULTS IN THE MOST CRITICAL LOADING FOR DESIGN. WHERE ANCHORAGE DETAILS AND LOCATIONS ARE NOT SPECIFICALLY SHOWN ON THE PLANS, THE FIELD INSTALLATION SHALL BE SUBJECT TO REVIEW AND APPROVAL OF THE MECHANICAL ENGINEER OF RECORD. SUPPORTS FOR ALL CONDUIT AND DUCTWORK SHALL BE IN ACCORDANCE WITH THE LATEST SMACNA "GUIDELINES FOR SEISMIC RESTRAINTS OF MECHANICAL SYSTEMS AND PIPING SYSTEMS" AND MSS SP–58 AND SP–69. DUCTWORK HANGERS SHALL BE DESIGNED TO SUPPORT THE WEIGHT OF THE DUCTWORK AND THE WEIGHT OF THE CONTENTS OF THE DUCTWORK.
12. CONTRACTOR SHALL BE RESPONSIBLE FOR THE COMPLETE FUNCTIONALITY OF THE EQUIPMENT INCLUDING ELECTRICAL AND CONTROL ITEMS ASSOCIATED WITH THE PROJECT.
13. PROVIDE EQUIPMENT CLEARANCES IN ACCORDANCE WITH THE MANUFACTURER'S RECOMMENDATIONS AND INSTRUCTIONS.
14. CONTRACTOR IS TO MAINTAIN RECORDED "AS–BUILT" INFORMATION ON ALL EXISTING SERVICES UNCOVERED DURING CONSTRUCTION AND ALL NEW SERVICES BEING INSTALLED. "AS–BUILT" INFORMATION SHALL BE CLEARLY MARKED IN COLORED PENCIL ON A PRINT OF THE CONTRACT DRAWING. RECORDED INFORMATION SHALL INCLUDE ROUTING AND INVERT ELEVATIONS. AT THE COMPLETION OF THE CONTRACT, THE CONTRACTOR SHALL TURN RECORDED "AS–BUILT" INFORMATION OVER TO THE PORT AND CONTRACTOR TO BE COORDINATED WITH AS BUILT REQUIREMENTS IN SPECIFICATION.
15. ALL WORK SHALL BE PERFORMED IN ACCORDANCE WITH THE LATEST EDITION OF THE CALIFORNIA PLUMBING CODE, CALIFORNIA MECHANICAL CODE, CALIFORNIA BUILDING CODE AND LATEST CITY ADOPTED.
16. SEQUENCE WORK TO AVOID CUTTING AND PATCHING. IF NECESSARY, REMOVE AND REPAIR WALL/CEILING FOR ACCESS TO WORK ON THE MECHANICAL SYSTEMS (SEE ARCHITECTURAL PLANS AND SPECIFICATIONS). PATCH AND FINISH TO MATCH ADJACENT SURFACE.

MECHANICAL ABBREVIATIONS

ABBREV.	DESCRIPTION	ABBREV.	DESCRIPTION
AABC	ASSOCIATED AIR BALANCING COUNCIL	(N)	NEW
ABBREV	ABBREVIATIONS	NC	NORMALLY CLOSED/NOISE CRITERIA
AD	AREA DRAIN/ACCESS DOOR	NEBB	NATIONAL ENVIRONMENTAL BALANCING BUREAU
ADJ	ADJUSTMENT	NFPA	NATIONAL FIRE PROTECTION ASSOCIATION
AFF	ABOVE FINISHED FLOOR	NTS	NOT TO SCALE
AMB	AMBIENT	ORD	ORDER
AMPS	AMPERES	PH	PHASE
ANSI	AMERICAN NATIONAL STANDARDS INSTITUTE	PSIG	POUNDS PER SQUARE INCH GAGE
AO	ANALOG OUTPUT	QTY	QUANTITY
AP	ACCESS PANEL	REQ'D	REQUIRED
APRROX	APPROXIMATE	RM	ROOM
ARCH	ARCHITECTURAL	RPM	REVOLUTIONS PER MINUTE
ASME	AMERICAN SOCIETY OF MECHANICAL ENGINEERS	SCH	SCHEDULE
ASTM	AMERICAN SOCIETY FOR TESTING AND MATERIALS	SMACNA	SHEET METAL AND AIR CONDITIONING CONTRACTORS NATIONAL ASSOCIATION
AVE	AVERAGE		
BDD	BACKDRAFT DAMPER	SP	STATIC PRESSURE
BLDG	BUILDING	SPECS	SPECIFICATION
BOD	BOTTOM OF DUCT	SQ	SQUARE
BTUH	BRITISH THERMAL UNITS PER HOUR	SS	STAINLESS STEEL
CBC	CALIFORNIA BUILDING CODE	SSD	SEE STRUCTURAL DRAWINGS
CFM	CUBIC FEET PER MINUTE	STD	STANDARD
CLG	CEILING	THK	THICK
CMC	CALIFORNIA MECHANICAL CODE	THRU	THROUGH
CONC	CONCRETE	TYP	TYPICAL
CONT	CONTINUATION	UC	UNDER CUT
C/W	COMPLETE WITH	UL	UNDERWRITER'S LABORATORY
DIM	DIMENSION	UNO	UNLESS NOTED OTHERWISE
DN	DOWN	V	VENT / VOLTS
DWGS	DRAWINGS	VD	VOLUME DAMPER
(E)	EXISTING	VEL	VELOCITY
EA	EXHAUST AIR	W	WATTS
EF	EXHAUST FAN	W/	WITH
ELEC	ELECTRICAL	W/O	WITHOUT
ELEV	ELEVATION		
ENT	ENTERING		
EQ	EQUAL		
ESP	EXTERNAL STATIC PRESSURE		
EXH	EXHAUST		
FD	FIRE DAMPER		
FDP	FIRE DAMPER WITH ACCESS PANEL		
FIN	FINISH		
FLEX	FLEXIBLE		
FLR	FLOOR		
FPM	FEET PER MINUTE		
FSD	FIRE SMOKE DAMPER		
FT	FEET		
GA	GAUGE		
GALV	GALVANIZED		
HP	HORSEPOWER		
HR	HOUR		
HVAC	HEATING, VENTILATION AND AIR CONDITIONING		
Hz	HERTZ		
IN	INCH(ES)		
IN WG	INCHES WATER GAUGE		
LBS	POUNDS		
LVG	LEAVING		
MAINT	MAINTENANCE		
MAX	MAXIMUM		
MIN	MINIMUM		
MISC	MISCELLANEOUS		
MSS	MANUFACTURERS STANDARDIZATION SOCIETY		
MSS SP–58	PIPE HANGERS AND SUPPORTS– MATERIALS, DESIGN AND MANUFACTURE		
MSS SP–69	PIPE HANGERS AND SUPPORTS– SELECTION AND APPLICATION		

MECHANICAL LEGEND

SYMBOL	ABBREV.	DESCRIPTION
	POC	POINT OF CONNECTION
M		FURNISHED AND INSTALLED BY MECHANICAL
ME		FURNISHED BY MECHANICAL AND INSTALLED BY ELECTRICAL
E		FURNISHED AND INSTALLED BY ELECTRICAL
		EXHAUST AIR GRILLE WITH DUCTWORK
10 X 6		DUCTWORK (1ST NUMBER INDICATES SIDE SHOWN), NET INSIDE DIMENSION
6ø	6ø	ROUND DUCTWORK, NET INSIDE DIMENSION
	FC	FLEXIBLE CONNECTION SEISMIC OR JOINT
UP		DUCT RISE
DN		DUCT DROP
		ROUND DUCT UP
		ROUND DUCT DOWN
		EXHAUST AIR DUCT UP
		EXHAUST AIR DUCT DOWN
		ROUND ELBOW
		MANUAL VOLUME DAMPER
	BDD	BACKDRAFT DAMPER
	FD/FSD	FIRE DAMPER/FIRE SMOKE DAMPER
	EA	EXHAUST AIR DUCT SECTION
		MECHANICAL EQUIPMENT TAG
1		SECTION OR DETAIL LETTER/NUMBER
M1.1 M3.1		TO THE SHEET THE SECTION/DETAIL IS ON
		WHERE THE SECTION/DETAIL WAS TAKEN FROM

NO.	DATE	DESCRIPTION	BY	APP.
0	11/02/12	ISSUED FOR RESTROOM PERMIT		

TABLE OF REVISIONS
CHECK WITH TRACING TO SEE IF YOU HAVE LATEST REVISION

REFERENCE INFORMATION & FILE NO. OF SURVEYS

PORT OF SAN FRANCISCO

SAN FRANCISCO PORT COMMISSION
PORT OF SAN FRANCISCO
DEPARTMENT OF ENGINEERING

DESIGNED: AK DATE: 10/26/12
DRAWN: RH DATE: 10/26/12
CHECKED: PM DATE: 10/26/12

APPROVED BY SAN FRANCISCO PORT COMMISSION
DATE: _____
CHIEF HARBOR ENGINEER

SCALE: NONE
SHEET OF SHEETS _ OF _

PIER 29
RESTROOM REMODEL

MECHANICAL
ABBREVIATIONS, LEGEND
AND GENERAL NOTES

CONTRACT NO.
DRAWING NO. M0.1
FILE NO. XXXX–29–S
REV. NO.

VIEW: PLOT1

MECHANICAL VENTILATION FAN SCHEDULE

EQUIP. NUMBER	BUILDING / LOCATION	AREA SERVED	FAN TYPE	AIR FLOW RATE	TOTAL EXT. S.P.	FAN RPM	DRIVE TYPE	MOTOR RATING	ELECTRICAL CHARACTERISTICS	OPERATING WEIGHT	MAXIMUM RADIATED SOUND LEVEL	REMARKS	MANUFACTURER
				CFM	IN. W.G.			HP	VOLT/PH/HZ	LBS.	Dba		
EF 1	PIER 29	MEN'S RESTROOM	CEILING EXHAUST FAN	330	0.20	1205	DIRECT	0.062	115/1/60	48	50	SEE NOTES BELOW	COOK MODEL GC-520 OR APPROVED EQUAL
EF 2	PIER 29	WOMEN'S RESTROOM	CEILING EXHAUST FAN	330	0.20	1205	DIRECT	0.062	115/1/60	48	50	SEE NOTES BELOW	COOK MODEL GC-520 OR APPROVED EQUAL

NOTES:
1. FAN OUTLET DUCT SHALL INCLUDE A BACKDRAFT DAMPER.
2. FAN SHALL BE CONTROLLED BY TIME CLOCK.
3. PROVIDE ALUMINUM GRILLE.
4. PROVIDE ROUND DUCT WALL CAP WITH DAMPER.
5. FAN SHALL BE ALTERNATE CEILING INSTALLATION FOR VERTICAL DISCHARGE.

DESIGN CRITERIA

PIER 29

NEW WORK:

1. INSTALL NEW EXHAUST DUCTWORK AND FAN SYSTEMS AND ASSOCIATED APPURTENANCES INCLUDING BUT NOT LIMITED TO SUPPORTS, CONTROLS AND POWER FOR MECHANICAL VENTILATION.
2. INSTALL DOOR LOUVERS FOR FAN SYSTEMS MAKE-UP AIR.

Creegan+D'Angelo INFRASTRUCTURE ENGINEERS
170 Columbus Ave., Suite 240
San Francisco, CA 94133
Tel (415) 834-2010
Fax (415) 834-2011
www.cdengineers.com

YEI ENGINEERS, INC.
7700 Edgewater Drive, Suite 128, Oakland, CA 94621
Phone: (510) 383-1050 Fax: (510) 383-1057

REGISTERED PROFESSIONAL ENGINEER
PATRICK R. MALLLIN
NO. M 30258
EXP. 06/30/13
MECHANICAL
STATE OF CALIFORNIA

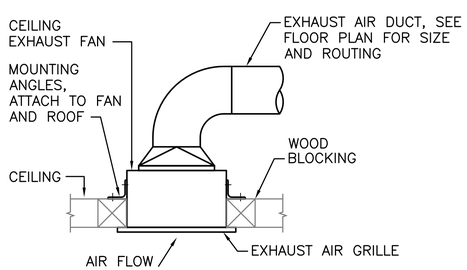

TYPICAL EXHAUST FAN MOUNTING DETAIL – EF-1 & 2 (1 / M0.2)

NTS

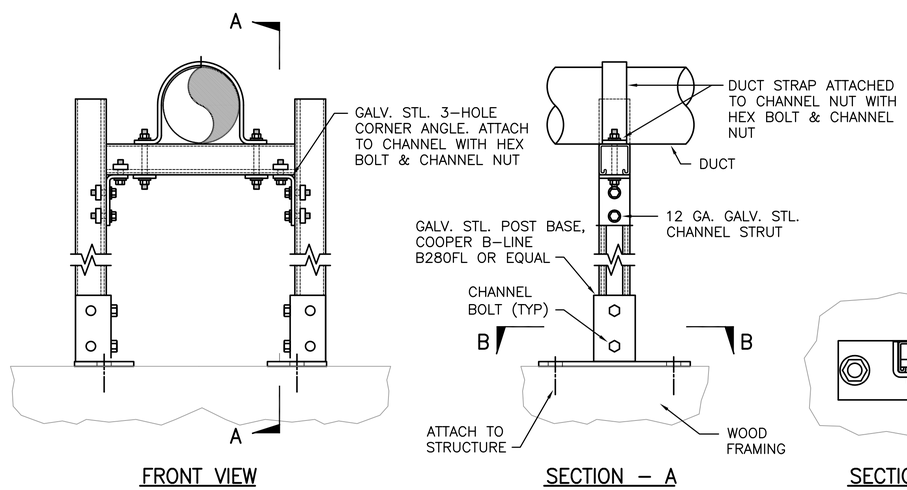

TYPICAL DUCT SUPPORT DETAIL (2 / M0.2)

SCALE: 3"=1'-0"

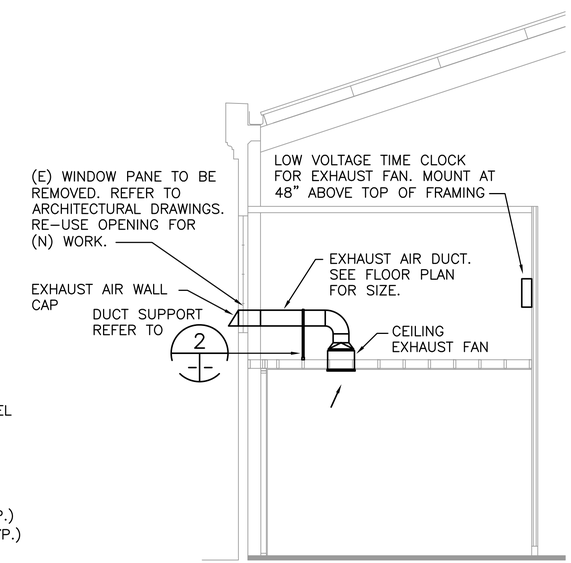

PIER 29 RESTROOM PARTIAL SECTION (3 / M1.1 M0.2)

SCALE: 1/4" = 1'-0"

NO.	DATE	DESCRIPTION	BY	APP.
0	11/02/12	ISSUED FOR RESTROOM PERMIT		

TABLE OF REVISIONS
CHECK WITH TRACING TO SEE IF YOU HAVE LATEST REVISION

REFERENCE INFORMATION & FILE NO. OF SURVEYS

SAN FRANCISCO PORT COMMISSION
PORT OF SAN FRANCISCO
DEPARTMENT OF ENGINEERING

DESIGNED: AK	DATE: 10/26/12	
DRAWN: RH	DATE: 10/26/12	
CHECKED: PM	DATE: 10/26/12	

APPROVED BY SAN FRANCISCO PORT COMMISSION
DATE: _____
CHIEF HARBOR ENGINEER

SCALE: AS SHOWN
SHEET OF SHEETS _ OF _

PIER 29
RESTROOM REMODEL

MECHANICAL DETAILS AND EQUIPMENT SCHEDULE

CONTRACT NO.
DRAWING NO. M0.2
FILE NO. XXXX-29-S
REV. NO.

VIEW: PLOT1

Creegan+D'Angelo
INFRASTRUCTURE ENGINEERS
170 Columbus Ave., Suite 240
San Francisco, CA 94133
Tel (415) 834-2010
Fax (415) 834-2011
www.cdengineers.com

YEI ENGINEERS, INC.
7700 Edgewater Drive, Suite 128, Oakland, CA 94621
Phone: (510) 383-1050 Fax: (510) 383-1057

REGISTERED PROFESSIONAL ENGINEER
PATRICK R. MALLILIN
NO. M 30258
EXP. 06/30/13
MECHANICAL
STATE OF CALIFORNIA

SPECIFICATIONS

1.1 ACTION SUBMITTALS

A. PRODUCT DATA: FOR EACH TYPE OF PRODUCT INDICATED. INCLUDE RATED CAPACITIES, OPERATING CHARACTERISTICS, AND FURNISHED SPECIALTIES AND ACCESSORIES. ALSO INCLUDE THE FOLLOWING:

1. CERTIFIED FAN PERFORMANCE CURVES WITH SYSTEM OPERATING CONDITIONS INDICATED.
2. CERTIFIED FAN SOUND–POWER RATINGS.
3. MOTOR RATINGS AND ELECTRICAL CHARACTERISTICS, PLUS MOTOR AND ELECTRICAL ACCESSORIES.
4. DAMPERS.

1.2 CEILING–MOUNTED VENTILATORS

A. BASIS–OF–DESIGN PRODUCT: SUBJECT TO COMPLIANCE WITH REQUIREMENTS, PROVIDE PRODUCT INDICATED ON DRAWINGS OR COMPARABLE PRODUCT BY ONE OF THE FOLLOWING:

1. LOREN COOK COMPANY.
2. GREENHECK FAN CORPORATION.
3. APPROVED EQUAL.

B. DESCRIPTION: FAN SHALL BE CEILING, DIRECT DRIVEN, CENTRIFUGAL EXHAUST FAN.

C. CERTIFICATIONS: FAN SHALL BE MANUFACTURED AT AN ISO 9001 CERTIFIED FACILITY. FAN SHALL BE LISTED BY UNDERWRITERS LABORATORIES (UL 705). FAN SHALL BEAR THE AMCA CERTIFIED RATINGS SEAL FOR SOUND AND AIR PERFORMANCE. UNIT SHALL BE SUPPLIED WITH INTEGRAL WIRING BOX AND DISCONNECT RECEPTACLE SHALL BE STANDARD. THE DUCT OUTLET COLLAR SHALL INCLUDE AN ALUMINUM DAMPER.

D. MOTOR SHALL BE OPEN DRIP PROOF TYPE WITH PERMANENTLY LUBRICATED BEARINGS, BUILT–IN THERMAL OVERLOAD PROTECTION AND DISCONNECT PLUG.

E. CONSTRUCTION: THE FAN HOUSING SHALL BE MIN. 20 GA GALVANIZED STEEL AND ACOUSTICALLY INSULATED. BLOWER AND MOTOR ASSEMBLY SHALL BE EASILY REMOVABLE FROM THE HOUSING. MOTOR SHALL BE MOUNTED ON VIBRATION ISOLATORS.

F. FAN WHEEL: CENTRIFUGAL WHEELS, CONSTRUCTED OF GALVANIZED STEEL. WHEEL SHALL BE BALANCED IN ACCORDANCE WITH AMCA STANDARD 204–96, BALANCE QUALITY AND VIBRATION LEVELS FOR FANS.

G. GRILLE: PAINTED ALUMINUM, PERFORATED GRILLE.

1.3 SHEET METAL MATERIALS

A. GENERAL MATERIAL REQUIREMENTS: COMPLY WITH SMACNA'S "HVAC DUCT CONSTRUCTION STANDARDS – METAL AND FLEXIBLE" FOR ACCEPTABLE MATERIALS, MATERIAL THICKNESSES, AND DUCT CONSTRUCTION METHODS UNLESS OTHERWISE INDICATED. SHEET METAL MATERIALS SHALL BE FREE OF PITTING, SEAM MARKS, ROLLER MARKS, STAINS, DISCOLORATIONS, AND OTHER IMPERFECTIONS.

B. GALVANIZED SHEET STEEL: COMPLY WITH ASTM A 653/A 653M.

1. GALVANIZED COATING DESIGNATION: G90

1.4 DUCT SEALING

A. SEAL DUCTS FOR DUCT STATIC–PRESSURE, SEAL CLASSES, AND LEAKAGE CLASSES SPECIFIED IN "DUCT SCHEDULE" ARTICLE ACCORDING TO SMACNA'S "HVAC DUCT CONSTRUCTION STANDARDS – METAL AND FLEXIBLE."

1.5 DUCT SCHEDULE

A. FABRICATE DUCTS WITH GALVANIZED SHEET STEEL EXCEPT AS OTHERWISE INDICATED AND AS FOLLOWS:

B. EXHAUST DUCTS:

1. DUCTS CONNECTED TO FANS EXHAUSTING (ASHRAE 62.1, CLASS 1 AND 2) AIR:
   a. PRESSURE CLASS: NEGATIVE 2–INCH WG
   b. MINIMUM SMACNA SEAL CLASS: C IF NEGATIVE PRESSURE
   c. SMACNA LEAKAGE CLASS FOR ROUND: 12

1.6 SUPPORTS

A. ALL SUPPORTS SHALL BE HOT DIP GALVANIZED STEEL (UNISTRUT ASSEMBLY, BOLTS AND NUTS, ETC.)

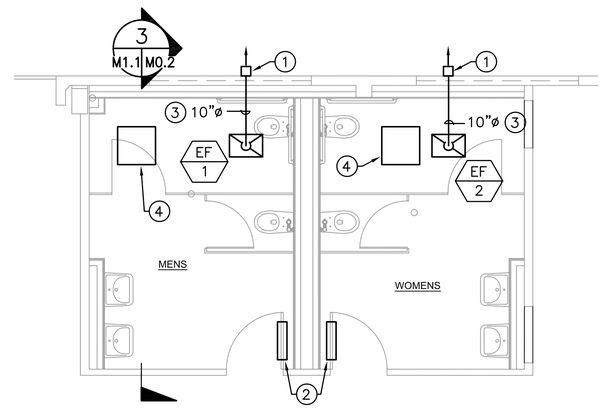

PIER 29 RESTROOM NEW WORK FLOOR PLAN
SCALE: 1/4" = 1'–0"
1 – M1.1

KEY NOTES:

1. (N) EXHAUST AIR WALL CAP WITH BACKDRAFT DAMPER.
2. (N) 24" X 12" WEATHER–PROOF NON–VISION DOOR LOUVER WITH BIRDSCREEN. SEE ARCHITECTURAL DRAWINGS FOR SPECIFICATIONS.
3. (N) 10"ø EXHAUST AIR DUCT TO WALL CAP.
4. CEILING ACCESS DOOR. REFER TO ARCHITECTURAL DRAWINGS FOR SPECIFICATIONS.

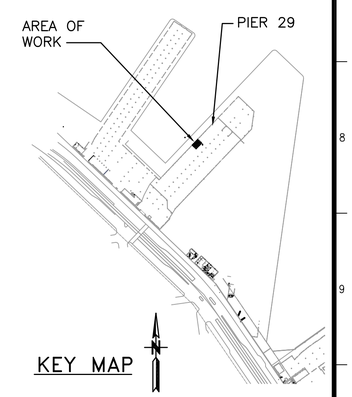

KEY MAP

NO.	DATE	DESCRIPTION	BY	APP.
0	11/02/12	ISSUED FOR RESTROOM PERMIT		

TABLE OF REVISIONS
CHECK WITH TRACING TO SEE IF YOU HAVE LATEST REVISION

REFERENCE INFORMATION & FILE NO. OF SURVEYS

SAN FRANCISCO PORT COMMISSION
PORT OF SAN FRANCISCO
DEPARTMENT OF ENGINEERING

DESIGNED: AK DATE: 10/26/12
DRAWN: RH DATE: 10/26/12
CHECKED: PM DATE: 10/26/12

APPROVED BY SAN FRANCISCO PORT COMMISSION
DATE: _____
CHIEF HARBOR ENGINEER

SCALE: AS SHOWN
SHEET OF SHEETS _ OF _

PIER 29
RESTROOM REMODEL
MECHANICAL
SPECIFICATIONS AND NEW WORK FLOOR PLAN

CONTRACT NO.
DRAWING NO. M1.1
FILE NO. XXXX–29–S
REV. NO.

VIEW: PLOT1

GENERAL NOTES:

1. PROVIDE A COMPLETE PLUMBING SYSTEM AS INDICATED WITH WASTE AND VENT, DOMESTIC COLD AND HOT WATER CONNECTIONS. ALL WORK WILL BE PERFORMED IN ACCORDANCE WITH THE LATEST EDITION OF CALIFORNIA PLUMBING CODE, CALIFORNIA MECHANICAL CODE, CALIFORNIA BUILDING CODE AND LATEST CITY ADOPTED.
2. ALL EQUIPMENT, FIXTURES, ETC. SHALL BE INSTALLED IN STRICT ACCORDANCE WITH THE MANUFACTURER'S RECOMMENDATIONS.
3. EXAMINE ALL DRAWINGS & FIELD VERIFY MECHANICAL/ELECTRICAL AND PLUMBING CONDITIONS PRIOR TO WORK & REPORT ANY DISCREPANCIES IN WRITING TO THE PORT.
4. THE DRAWINGS ARE DIAGRAMMATIC & SHALL NOT BE SCALED TO DETERMINE EXACT LOCATION OF PLUMBING & EQUIPMENT.
5. SEQUENCE WORK TO AVOID CUTTING AND PATCHING. IF NECESSARY, REMOVE & REPAIR WALL/CEILING/FLOOR/ROOF FOR ACCESS TO WORK ON THE PLUMBING SYSTEMS (SEE ARCHITECTURAL PLANS & SPECIFICATIONS). PATCH & FINISH TO MATCH ADJACENT SURFACE. NO NEW FLOOR PENETRATIONS WITHOUT WRITTEN INSTRUCTIONS FROM STRUCTURAL ENGINEER.
6. TRAP PRIMER IS REQUIRED AT ALL FLOOR DRAINS.
7. INSULATE ALL HOT AND COLD WATER AND DRAIN PIPING UNDERNEATH LAVATORIES.
8. SECURELY FASTEN ALL PIPING WITHIN STRUCTURES TO THE BUILDING CONSTRUCTION BY MEANS OF HANGERS, SUPPORTS, GUIDES, ANCHORS, AND SWAY BRACES TO MAINTAIN PIPE ALIGNMENT, TO PREVENT SAGGING, AND TO PREVENT NOISE AND EXCESSIVE STRAIN ON PIPING DUE TO MOVEMENT UNDER OPERATING CONDITIONS. ALL MECHANICAL EQUIPMENT SHALL BE BRACED OR ANCHORED TO RESIST A HORIZONTAL FORCE ACTING IN ANY DIRECTION USING THE FOLLOWING CRITERIA: THE TOTAL DESIGN LATERAL SEISMIC FORCE SHALL BE DETERMINED FROM CBC 1613A. FORCES SHALL BE APPLIED IN THE HORIZONTAL DIRECTIONS THAT WILL RESULT IN THE MOST CRITICAL LOADING FOR DESIGN. WHERE ANCHORAGE DETAILS AND LOCATIONS ARE NOT SPECIFICALLY SHOWN ON THE PLANS, THE FIELD INSTALLATION SHALL BE SUBJECT TO REVIEW AND APPROVAL OF THE MECHANICAL ENGINEER OF RECORD. SUPPORTS FOR ALL PIPING SHALL BE IN ACCORDANCE WITH LATEST SMACNA GUIDELINES FOR SEISMIC RESTRAINTS OF MECHANICAL SYSTEMS AND PIPING SYSTEMS AND MSS SP–58 AND SP–69.
9. ALL PIPES AND FITTINGS UTILIZED IN WATER SUPPLY SYSTEMS SHALL ALSO CONFORM TO NSF 61 AS REQUIRED BY THE LATEST UNIFORM PLUMBING CODE AND THE LATEST CALIFORNIA PLUMBING CODE.
10. COORDINATE INSTALLATION OF ALL EQUIPMENT AND PIPING WITH OTHER TRADES PRIOR TO INSTALLATION. ENSURE THAT ALL CONTROL DEVICES, ACCESS PANELS IN FINISHED SPACES, OTHER THAN THAT SHOWN, CONTRACTOR SHALL COORDINATE EXACT LOCATION OF PANELS PRIOR TO INSTALLATION. INSTALL PIPING TO BEST SUIT FIELD CONDITIONS AND COORDINATE WITH OTHER TRADES.
11. PROVIDE ISOLATION VALVE FOR HOT AND COLD WATER BRANCH PIPING TO ISOLATE EACH RESTROOM AND OTHER ROOMS WITH FIXTURES FROM THE MAIN HOT AND COLD WATER SUPPLY PIPING.
12. VERIFY AT PROJECT SITE EXACT SIZE, LOCATION, INVERT ELEVATION, AND CLEARANCE OF ALL EXISTING SERVICES BEING EXTENDED, RELOCATED, OR REMOVED.
13. ADVISE THE PORT IN WRITING IN THE EVENT A CONFLICT OCCURS BETWEEN THE REQUIREMENTS OF THE CONTRACT DOCUMENTS AND ACTUAL FIELD CONDITIONS. THE CONTRACTOR SHALL BEAR ALL COSTS FOR RELOCATION OF EQUIPMENT, PIPING, ETC., FROM FAILURE TO PROPERLY COORDINATE INSTALLATIONS AND ADVISE OF THE CONFLICT IN WRITING PRIOR TO INSTALLATION.
14. ARRANGE ALL PIPING WITHIN STRUCTURES NEATLY ALONG WALLS AND/OR IN NEAT, HORIZONTAL GROUPS AND MAINTAIN REQUIRED SLOPES.
15. PROVIDE VALVES AND OTHER PIPING SPECIALTIES SAME SIZE AS LINE SIZE UNLESS INDICATED OTHERWISE.
16. PROVIDE A HANGER NOT MORE THAN 12–INCHES FROM THE POINT OF CHANGE OF DIRECTION OF A PIPE RUN IN BOTH HORIZONTAL AND VERTICAL PLANE.
17. CONTRACTOR SHALL REMOVE, RELOCATE, REPLACE WITH NEW AND/OR RECONNECT ALL EXISTING SERVICES AS REQUIRED BY NEW CONSTRUCTION.
18. CERTAIN VERTICAL AND HORIZONTAL OFFSETS ARE SHOWN IN PIPING ON PLANS TO INDICATE THE GENERAL POSITION RELATIONSHIP OF THE SYSTEMS WITHIN THE FURRED CEILING SPACE. PROVIDE ADDITIONAL OFFSETS SIMILAR TO THOSE SHOWN, AS REQUIRED TO COORDINATE WITH INSTALLATION REQUIREMENTS OF OTHER SYSTEMS.
19. PROVIDE FIRESTOPPING AROUND ALL PIPES WHICH PENETRATE FIRE SEPARATIONS. PROVIDE COLLARS OR TRIM RINGS AROUND PIPING TO RETAIN PACKING.
20. SET ALL FLOOR DRAINS TO LOCATIONS INDICATED ON THE ARCHITECTURAL DRAWINGS.
21. SLOPE ALL DRAINAGE PIPING WITHIN THE BUILDING DOWN IN THE DIRECTION OF FLOW A MINIMUM OF 1/4–INCH PER FOOT UNLESS OTHERWISE NOTED.
22. CONTRACTOR IS TO MAINTAIN RECORDED "AS–BUILT" INFORMATION ON ALL EXISTING SERVICES UNCOVERED DURING CONSTRUCTION AND ALL NEW SERVICES BEING INSTALLED. "AS–BUILT" INFORMATION SHALL BE CLEARLY MARKED IN COLOR PENCIL ON A BLUE PRINT OF CONTRACT DRAWING. RECORDED INFORMATION SHALL INCLUDE ROUTING AND INVERT ELEVATIONS. AT THE COMPLETION OF THE CONTRACT, THE CONTRACTOR SHALL TURN RECORDED "AS–BUILT" INFORMATION OVER TO THE ENGINEER.
23. PROVIDE WALL/CEILING ACCESS PANEL TO ALL TRAP PRIMER VALVES AND DOMESTIC COLD AND HOT WATER ISOLATION VALVES.
24. COMPLY WITH SAN FRANCISCO PORT PLUMBING CODE FOR REQUIREMENTS OF PIPING SUSPENDED UNDER PIERS, PER SECTION 314.0.
    A. LATERAL BRACING.
    B. STAINLESS STEEL FOR HANGERS INCLUDING HARDWARE.
    C. PROVIDE 4–BAND NO–HUB COUPLINGS.

Creegan+D'Angelo INFRASTRUCTURE ENGINEERS
170 Columbus Ave., Suite 240
San Francisco, CA 94133
Tel (415) 834-2010
Fax (415) 834-2011
www.cdengineers.com

YEI ENGINEERS, INC.
7700 Edgewater Drive, Suite 128, Oakland, CA 94621
Phone: (510) 383-1050 Fax: (510) 383-1057

REGISTERED PROFESSIONAL ENGINEER
PATRICK R. MALLILIN
NO. M 30258
EXP. 06/30/13
MECHANICAL
STATE OF CALIFORNIA

PLUMBING ABBREVIATIONS

ABBREV.	DESCRIPTION
@	AT
AF	ABOVE FLOOR
AFF	ABOVE FINISHED FLOOR
AMPS	AMPERES
BF	BELOW FLOOR
BG	BELOW GROUND
℄	CENTER LINE
CLG	CEILING
CPC	CALIFORNIA PLUMBING CODE
CW	COLD WATER
DIA	DIAMETER
DN	DOWN
DWGS	DRAWINGS
(E)	EXISTING
°F	DEGREES FAHRENHEIT
FD	FLOOR DRAIN
FT	FEET
G	GAS
GAL	GALLON
GPH	GALLONS PER HOUR
GPM	GALLONS PER MINUTE
HB/HB–WB	HOSE–BIBB/HOSE BIBB–WALL BOX
HW	HOT WATER
HWR	HOT WATER RETURN
ID	INSIDE DIAMETER
IN	INCH
INV	INVERT
IWH	INSTANTANEOUS WATER HEATER
KW	KITCHEN WASTE/KILOWATT
LVG	LEAVING
MAX	MAXIMUM
MBH	THOUSAND BRITISH THERMAL UNITS
MIN	MINIMUM
MSS	MANUFACTURERS STANDARD SOCIETY
MSS SP–58	PIPE HANGERS AND SUPPORTS – MATERIALS DESIGN AND MANUFACTURE
MSS SP–69	PIPE HANGERS AND SUPPORTS – SELECTION AND APPLICATION
(N)	NEW
NSF 61	NATIONAL SANITATION FOUNDATION – DRINKING WATER SYSTEM COMPONENTS – HEALTH EFFECTS
PSIG	POUNDS PER SQUARE INCH, GAGE
S	SANITARY SEWER
SS	STAINLESS STEEL
TEMP	TEMPERATURE
TYP	TYPICAL
UL	UNDERWRITERS LABORATORY
V	VENT
V/PH/Hz	VOLTS/PHASE/HERTZ
VTR	VENT TO ROOF
W/	WITH
±	PLUS/MINUS

PLUMBING LEGEND

SYMBOL	ABBREV.	DESCRIPTION
	POC	POINT OF CONNECTION
	POD	POINT OF DEMOLITION
	CW	DOMESTIC COLD WATER PIPE
	HWS	DOMESTIC HOT WATER SUPPLY PIPE
	HWR	DOMESTIC HOT WATER RETURN PIPE
	SS	SEWER PIPE ABOVE FLOOR
	SS	SEWER DRAIN PIPE BELOW FLOOR
	V	VENT PIPE
VTR	VTR	VENT THRU ROOF
		EXISTING PIPING / EQUIPMENT TO BE DEMOLISHED
	FD	FLOOR DRAIN
WCO	WCO	WALL CLEAN OUT
FCO/COTG	FCO	FLOOR OR CLEAN OUT TO GRADE
CO	CO	CLEAN OUT
		SLOPE
		ELBOW DOWN
		ELBOW UP
		ELBOW UP WITH VALVE
		TEE DOWN
		TEE UP
	RED	REDUCER
	HB	HOSE BIBB
	VTR/ARV	VENT THRU ROOF/AIR RELIEF VALVE
TP		TRAP PRIMER
		ISOLATION/SHUT OFF/VALVE
	CKV	CHECK VALVE
	BV	BALANCING VALVE
		BALL VALVE
	WHA	WATER HAMMER ARRESTER
T		THERMOSTAT/AQUASTAT/TEMPERATURE SENSOR
E		FURNISHED AS INSTALLED BY ELECTRICAL
		UNION
1		SECTION OR DETAIL LETTER/NUMBER
P1.1 P3.1		TO THE SHEET THE SECTION/DETAIL IS ON
		WHERE THE SECTION/DETAIL WAS TAKEN FROM

NO.	DATE	DESCRIPTION	BY	APP.
0	11/02/12	ISSUED FOR RESTROOM PERMIT		

TABLE OF REVISIONS
CHECK WITH TRACING TO SEE IF YOU HAVE LATEST REVISION

REFERENCE INFORMATION & FILE NO. OF SURVEYS

PORT OF SAN FRANCISCO

SAN FRANCISCO PORT COMMISSION
PORT OF SAN FRANCISCO
DEPARTMENT OF ENGINEERING

DESIGNED: AK DATE: 10/26/12
DRAWN: RH DATE: 10/26/12
CHECKED: PM DATE: 10/26/12

APPROVED BY SAN FRANCISCO PORT COMMISSION
DATE: _____
CHIEF HARBOR ENGINEER

SCALE: NONE
SHEET OF SHEETS _ OF _

PIER 29
RESTROOM REMODEL

PLUMBING
ABBREVIATIONS, LEGEND
AND GENERAL NOTES

CONTRACT NO.
DRAWING NO. P0.1
FILE NO. XXXX–29–S
REV. NO.

VIEW: PLOT1

PLUMBING FIXTURE AND CONNECTION SCHEDULE

SYMBOL	FIXTURE	TRAP	WASTE	VENT	CW	HW	TW	SPECIFICATION
WC–1 (ADA)	WATER CLOSET	INTEGRAL TRAP	4	2	1	–	–	ADA COMPLIANT, WALL MOUNTED, 1.28 GPF ELONGATED BOWL VITREOUS CHINA ZURN MODEL Z5615–BWL HET WITH PAIRED ZURN MODEL Z6000AV–HET EXPOSED MANUAL FLUSH VALVE AT 1.28 GALLONS PER FLUSH. PROVIDE WITH ELONGATED OPEN–FRONT SEAT ZURN MODEL Z5955–SS–EL–STS AND CLOSET BOLT/WAX RING. PROVIDE FIXTURE SUPPORT CARRIER ZURN MODEL ZN1204–ND
LV–1 (ADA)	LAVATORY	1 1/4	1 1/2	1 1/2	1/2	1/2	–	ADA COMPLIANT, WALL–HUNG, 20" x 18" VITREOUS CHINA WITH SINGLE–HOLE LAVATORY ZURN MODEL 5341–PED WITH PAIRED METERING FAUCET ZURN MODEL Z86100–MYCS SLOW–CLOSING METERING FAUCET WITH AN INTEGRAL BRASS 3–3/4" CENTERLINE SPOUT, VANDAL–RESISTANT, AND ADA COMPLIANT COLOR–CODED HANDLE, GRID STRAINER DRAIN AND P–TRAP WITH CLEANOUT. PROVIDE LAVATORY PIPING AND DRAIN GUARD ZURN MODEL Z–6900–VG AND FIXTURE SUPPORT CARRIER ZURN MODEL Z–1231.
FD–1	FLOOR DRAIN	2	2	1 1/2	1/2	–	–	PROVIDE TRAP PRIMER
HB–1	HOSE BIBB LOOSE KEY HANDLE	–	–	–	3/4	–	–	PROVIDE VACUUM BREAKER FOR INDOOR USE, ZURN MODEL Z1341–PC WITH VANDAL RESISTANT OPERATING STEM.

FIXTURE NOTES:

1. ALL VITREOUS CHINA FIXTURES SHALL BE TWICE FIRED GRADE. CARRIER SUPPORT SHALL BE BY SAME MANUFACTURER.
2. FLUSH VALVES AND FAUCETS SHALL BE LISTED WITH CALIFORNIA ENERGY COMMISSION. WATER CLOSET SHALL FLUSH WITH NO MORE THAN 1.28 GALLON PER FLUSH. FAUCET FOR LAVATORIES SHALL FLOW AT NO MORE THAN 0.5 GALLON PER MINUTE.
3. ADA COMPLIANT FIXTURES TO BE INSTALLED IN ACCORDANCE WITH THE LATEST CALIFORNIA PLUMBING CODE.
4. INSTALL PLUMBING FIXTURES AND TRIM FROM ONE MANUFACTURER FOR UNIFORMITY OF INSTALLATION.

DRAIN AND CLEANOUT SCHEDULE

SYMBOL	DESCRIPTION	MANUFACTURER	MODEL NO.	STRAINER TYPE	REMARKS
FD–1	FLOOR DRAIN	ZURN	Z415B–P–VP	6" ROUND TOP	PROVIDE 1/2" TRAP PRIMER CONNECTIONS AND VANDAL–PROOF SECURED TOP.
FCO	FLOOR CLEANOUT	ZURN	ZN–1400–HD	–	NICKEL BRONZE COVER ROUND.
WCO	WALL CLEANOUT	ZURN	ZN–1468	–	BRONZE TAPER PLUG, ROUND STAINLESS STEEL COVER AND VANDAL–PROOF SCREW.
TP	TRAP PRIMER	PRECISION PLUMBING PRODUCTS, INC.	P1–500	–	TRAP PRIMER WITH DISTRIBUTION UNIT MODEL DU–U.
WHA	WATER HAMMER ARRESTOR	ZURN	–	–	

ELECTRIC WATER HEATER SCHEDULE

EQUIP. I.D.	BUILDING/ LOCATION	SERVICE AREA	TYPE	MIN. ELECTRIC HEATING	ENT. WATER TEMP.	LVG. WATER TEMP.	CW/HW WATER CONNECTIONS	MIN. CIRCUIT AMPS. @ 208V/1PH/60HZ	REMARKS	MANUFACTURER OR APPROVED EQUAL
				KW	°F	°F	IN.			
IWH–1	PIER 29	RESTROOMS	INSTANTANEOUS TANKLESS–LOW FLOW (0.5 GPM)	8.00	55	105	3/8	38	SEE NOTES	CHRONOMITE MODEL E–80L/208–FLLP

NOTES:

1. PROVIDE DISCONNECT SWITCH.
2. INSTALL BELOW LAVATORY.
3. PROVIDE FACTORY PRESET.

DESIGN CRITERIA

PIER 29

DEMOLITION WORK:

1. REMOVE EXISTING PLUMBING FIXTURES AND ASSOCIATED APPURTENANCES AND CONCEAL (CUT AND CAP) ABANDONED WATER AND SEWER LINES BEHIND WALLS AND/OR BELOW FLOORS.

NEW WORK:

1. INSTALL NEW ADA COMPLIANT PLUMBING FIXTURES AND NEW DOMESTIC WATER AND SANITARY SEWER LINES AND ASSOCIATED APPURTENANCES INCLUDING BUT NOT LIMITED TO SUPPORTS AND FITTINGS.
2. INSTALL NEW ELECTRIC TANKLESS HOT WATER SYSTEM AND ASSOCIATED APPURTENANCES INCLUDING BUT NOT LIMITED TO CONTROLS AND SUPPORTS.
3. TEMPORARY WATER METER TO BE REUSED. CONTRACTOR SHALL FIELD VERIFY AND COORDINATE WITH THE PORT FOR EXACT WATER METER LOCATION PRIOR TO BEGINNING WORK.
4. ADD ALTERNATE BID – INSTALL NEW SANITARY SEWER HOSE CONNECTION FOR PORTABLE DRAINAGE.

PIER 29–1/2

DEMOLITION WORK:

1. REMOVE AND PERMANENTLY CAP EXISTING DOMESTIC COLD WATER SUPPLY LINES SERVING THREE BUILDINGS FOR NEW WORK CONNECTIONS.

NEW WORK:

1. CONNECT NEW 2" DOMESTIC COLD WATER LINE AND ASSOCIATED APPURTENANCES TO EXISTING 4" DOMESTIC COLD WATER SUPPLY LINE INSIDE PIER 29 TO SERVE THREE BUILDINGS.
2. CONNECT NEW 2" DOMESTIC COLD WATER LINE AND ASSOCIATED APPURTENANCES INCLUDING SUPPORTS AND FITTINGS TO EXISTING DOMESTIC COLD WATER SUPPLY LINES SERVING THREE BUILDINGS.
3. TEMPORARY WATER METER TO BE REUSED. CONTRACTOR SHALL FIELD VERIFY AND COORDINATE WITH THE PORT FOR EXACT WATER METER LOCATION PRIOR TO BEGINNING WORK.

Creegan+D'Angelo INFRASTRUCTURE ENGINEERS
170 Columbus Ave., Suite 240
San Francisco, CA 94133
Tel (415) 834-2010
Fax (415) 834-2011
www.cdengineers.com

YEI ENGINEERS, INC.
7700 Edgewater Drive, Suite 128, Oakland, CA 94621
Phone: (510) 383-1050 Fax: (510) 383-1057

REGISTERED PROFESSIONAL ENGINEER
PATRICK R. MALLILIN
NO. M 30258
EXP. 06/30/13
MECHANICAL
STATE OF CALIFORNIA

NO.	DATE	DESCRIPTION	BY	APP.
0	11/02/12	ISSUED FOR RESTROOM PERMIT		

TABLE OF REVISIONS
CHECK WITH TRACING TO SEE IF YOU HAVE LATEST REVISION

REFERENCE INFORMATION & FILE NO. OF SURVEYS

PORT OF SAN FRANCISCO

SAN FRANCISCO PORT COMMISSION
PORT OF SAN FRANCISCO
DEPARTMENT OF ENGINEERING

DESIGNED: AK DATE: 10/26/12
DRAWN: RH DATE: 10/26/12
CHECKED: PM DATE: 10/26/12

APPROVED BY SAN FRANCISCO PORT COMMISSION
DATE: _____
CHIEF HARBOR ENGINEER

SCALE: NONE
SHEET OF SHEETS _ OF _

PIER 29
RESTROOM REMODEL

PLUMBING
EQUIPMENT SCHEDULES

CONTRACT NO.
DRAWING NO. P0.2
FILE NO. XXXX–29–S
REV. NO.

VIEW: PLOT1

GENERAL

1.1 SUBMITTALS

A. PRODUCT DATA – FOR THE FOLLOWING PRODUCTS:
1. SLEEVES AND SLEEVE SEALS FOR PLUMBING PIPING.
2. ESCUTCHEONS FOR PLUMBING PIPING.
3. IDENTIFICATION FOR PLUMBING AND EQUIPMENT.
4. DOMESTIC WATER PIPING.
5. DOMESTIC PIPING INSULATION.
6. GENERAL DUTY VALVES FOR PLUMBING PIPING.
7. SANITARY WASTE AND VENT PIPING.

1.2 FIELD CONDITIONS

A. INTERRUPTION OF EXISTING WATER SERVICE: DO NOT INTERRUPT WATER SERVICE TO FACILITIES OCCUPIED BY THE PORT OR OTHERS UNLESS PERMITTED UNDER THE FOLLOWING CONDITIONS AND THEN ONLY AFTER ARRANGING TO PROVIDE TEMPORARY WATER SERVICE ACCORDING TO REQUIREMENTS INDICATED:

1. NOTIFY THE PORT NO FEWER THAN TWO DAYS IN ADVANCE OF PROPOSED INTERRUPTION OF WATER SERVICE.
2. DO NOT INTERRUPT WATER SERVICE WITHOUT THE PORT'S WRITTEN PERMISSION.

DOMESTIC WATER PIPING

1.1 PIPING MATERIALS

A. POTABLE–WATER PIPING AND COMPONENTS SHALL COMPLY WITH NSF 14 AND NSF 61. PLASTIC PIPING COMPONENTS SHALL BE MARKED WITH "NSF–PW."

1.2 COPPER TUBE AND FITTINGS

A. HARD COPPER TUBE: ASTM B 88, TYPE L WATER TUBE, DRAWN TEMPER.

B. CAST–COPPER SOLDER–JOINT FITTINGS: ASME B16.18, PRESSURE FITTINGS.

C. WROUGHT–COPPER SOLDER–JOINT FITTINGS: ASME B16.22, WROUGHT–COPPER PRESSURE FITTINGS.

D. BRONZE FLANGE: ASME B16.24, CLASS 150, WITH SOLDER–JOINT ENDS.

E. COPPER UNIONS:
1. MSS SP–123.
2. CAST–COPPER–ALLOY, HEXAGONAL–STOCK BODY.
3. BALL–AND–SOCKET, METAL–TO–METAL SEATING SURFACES.
4. SOLDER–JOINT OR THREADED ENDS.

1.3 PIPING JOINING MATERIALS

A. PIPE–FLANGE GASKET MATERIALS:
1. AWWA C110/A21.10, RUBBER, FLAT FACE, 1/8 INCH THICK OR ASME B16.21, NONMETALLIC AND ASBESTOS FREE UNLESS OTHERWISE INDICATED; FULL–FACE OR RING TYPE UNLESS OTHERWISE INDICATED.

B. BRAZING FILLER METALS: AWS A5.8/A5.8M, BCUP SERIES, COPPER–PHOSPHORUS ALLOYS FOR GENERAL–DUTY BRAZING UNLESS OTHERWISE INDICATED.

1.4 TRANSITION FITTINGS
A. GENERAL REQUIREMENTS:
1. SAME SIZE AS PIPES TO BE JOINED.
2. PRESSURE RATING AT LEAST EQUAL TO PIPES TO BE JOINED.
3. END CONNECTIONS COMPATIBLE WITH PIPES TO BE JOINED.

1.5 DIELECTRIC FITTINGS

A. GENERAL REQUIREMENTS: ASSEMBLY OF COPPER ALLOY AND FERROUS MATERIALS WITH SEPARATING NONCONDUCTIVE INSULATING MATERIAL. INCLUDE END CONNECTIONS COMPATIBLE WITH PIPES TO BE JOINED.

B. DIELECTRIC UNIONS:
1. MANUFACTURERS: SUBJECT TO COMPLIANCE WITH REQUIREMENTS, PROVIDE PRODUCTS BY ONE OF THE FOLLOWING:

a. CAPITOL MANUFACTURING COMPANY; MEMBER OF THE PHOENIX FORGE GROUP.

b. CENTRAL PLASTICS COMPANY.

c. HART INDUSTRIES INTERNATIONAL, INC.

d. WATTS; A DIVISION OF WATTS WATER TECHNOLOGIES, INC.

e. WILKINS; A ZURN COMPANY.

2. DESCRIPTION:
a. STANDARD: ASSE 1079
b. PRESSURE RATING: 150 AT 180 DEG F .
c. END CONNECTIONS: SOLDER–JOINT COPPER ALLOY AND THREADED FERROUS.

C. DIELECTRIC FLANGES:

1. MANUFACTURERS: SUBJECT TO COMPLIANCE WITH REQUIREMENTS, PROVIDE PRODUCTS BY ONE OF THE FOLLOWING:
a. CAPITOL MANUFACTURING COMPANY.
b. CENTRAL PLASTICS COMPANY.
c. EPCO SALES, INC.
d. WATTS REGULATOR CO.; A DIVISION OF WATTS WATER TECHNOLOGIES, INC.

2. DESCRIPTION:
a. FACTORY–FABRICATED, BOLTED, COMPANION–FLANGE ASSEMBLY.
b. PRESSURE RATING: 150 PSIG MINIMUM.
c. END CONNECTIONS: SOLDER–JOINT COPPER ALLOY AND THREADED FERROUS; THREADED SOLDER–JOINT COPPER ALLOY AND THREADED FERROUS.

1.6 FIELD QUALITY CONTROL

A. PERFORM THE FOLLOWING TESTS AND INSPECTIONS:

1. PIPING INSPECTIONS:
a. DO NOT ENCLOSE, COVER, OR PUT PIPING INTO OPERATION UNTIL IT HAS BEEN INSPECTED AND APPROVED BY AUTHORITIES HAVING JURISDICTION.
b. DURING INSTALLATION, NOTIFY AUTHORITIES HAVING JURISDICTION AT LEAST ONE DAY BEFORE INSPECTION MUST BE MADE. PERFORM TESTS SPECIFIED BELOW IN PRESENCE OF AUTHORITIES HAVING JURISDICTION:
1) ROUGHING–IN INSPECTION: ARRANGE FOR INSPECTION OF PIPING BEFORE CONCEALING OR CLOSING IN AFTER ROUGHING IN AND BEFORE SETTING FIXTURES.
2) FINAL INSPECTION: ARRANGE FOR AUTHORITIES HAVING JURISDICTION TO OBSERVE TESTS SPECIFIED IN "PIPING TESTS" SUBPARAGRAPH BELOW AND TO ENSURE COMPLIANCE WITH REQUIREMENTS.
c. REINSPECTION: IF AUTHORITIES HAVING JURISDICTION FIND THAT PIPING WILL NOT PASS TESTS OR INSPECTIONS, MAKE REQUIRED CORRECTIONS AND ARRANGE FOR REINSPECTION.
d. REPORTS: PREPARE INSPECTION REPORTS AND HAVE THEM SIGNED BY AUTHORITIES HAVING JURISDICTION.

2. PIPING TESTS:
a. FILL DOMESTIC WATER PIPING. CHECK COMPONENTS TO DETERMINE THAT THEY ARE NOT AIR BOUND AND THAT PIPING IS FULL OF WATER.
b. TEST FOR LEAKS AND DEFECTS IN NEW PIPING AND PARTS OF EXISTING PIPING THAT HAVE BEEN ALTERED, EXTENDED, OR REPAIRED. IF TESTING IS PERFORMED IN SEGMENTS, SUBMIT A SEPARATE REPORT FOR EACH TEST, COMPLETE WITH DIAGRAM OF PORTION OF PIPING TESTED.
c. LEAVE NEW, ALTERED, EXTENDED, OR REPLACED DOMESTIC WATER PIPING UNCOVERED AND UNCONCEALED UNTIL IT HAS BEEN TESTED AND APPROVED. EXPOSE WORK THAT WAS COVERED OR CONCEALED BEFORE IT WAS TESTED.
d. CAP AND SUBJECT PIPING TO STATIC WATER PRESSURE OF 50 PSIG (345 KPA) ABOVE OPERATING PRESSURE, WITHOUT EXCEEDING PRESSURE RATING OF PIPING SYSTEM MATERIALS. ISOLATE TEST SOURCE AND ALLOW IT TO STAND FOR FOUR HOURS. LEAKS AND LOSS IN TEST PRESSURE CONSTITUTE DEFECTS THAT MUST BE REPAIRED.
e. REPAIR LEAKS AND DEFECTS WITH NEW MATERIALS, AND RETEST PIPING OR PORTION THEREOF UNTIL SATISFACTORY RESULTS ARE OBTAINED.
f. PREPARE REPORTS FOR TESTS AND FOR CORRECTIVE ACTION REQUIRED.

3. DOMESTIC WATER PIPING WILL BE CONSIDERED DEFECTIVE IF IT DOES NOT PASS TESTS AND INSPECTIONS.

4. PREPARE TEST AND INSPECTION REPORTS.

1.7 ADJUSTING

A. PERFORM THE FOLLOWING ADJUSTMENTS BEFORE OPERATION:

1. CLOSE DRAIN VALVES, HYDRANTS, AND HOSE BIBBS.

2. OPEN SHUTOFF VALVES TO FULLY OPEN POSITION.

3. OPEN THROTTLING VALVES TO PROPER SETTING.

4. ADJUST BALANCING VALVES IN HOT–WATER–CIRCULATION RETURN PIPING TO PROVIDE ADEQUATE FLOW.
a. MANUALLY ADJUST BALL–TYPE BALANCING VALVES IN HOT–WATER–CIRCULATION RETURN PIPING TO PROVIDE HOT–WATER FLOW IN EACH BRANCH.
b. ADJUST CALIBRATED BALANCING VALVES TO FLOWS INDICATED.

5. REMOVE PLUGS USED DURING TESTING OF PIPING AND FOR TEMPORARY SEALING OF PIPING DURING INSTALLATION.

6. REMOVE AND CLEAN STRAINER SCREENS. CLOSE DRAIN VALVES AND REPLACE DRAIN PLUGS.

7. REMOVE FILTER CARTRIDGES FROM HOUSINGS AND VERIFY THAT CARTRIDGES ARE AS SPECIFIED FOR APPLICATION WHERE USED AND ARE CLEAN AND READY FOR USE.

8. CHECK PLUMBING SPECIALTIES AND VERIFY PROPER SETTINGS, ADJUSTMENTS, AND OPERATION.

Creegan+D'Angelo INFRASTRUCTURE ENGINEERS
170 Columbus Ave., Suite 240
San Francisco, CA 94133
Tel (415) 834-2010
Fax (415) 834-2011
www.cdengineers.com

REGISTERED PROFESSIONAL ENGINEER PATRICK R. MALLILIN NO. M 30258 EXP. 06/30/13 MECHANICAL STATE OF CALIFORNIA

YEI ENGINEERS, INC.
7700 Edgewater Drive, Suite 128, Oakland, CA 94621
Phone: (510) 383-1050 Fax: (510) 383-1057

1.8 CLEANING

A. CLEAN AND DISINFECT POTABLE DOMESTIC WATER PIPING AS FOLLOWS:
1. PURGE NEW PIPING AND PARTS OF EXISTING PIPING THAT HAVE BEEN ALTERED, EXTENDED, OR REPAIRED BEFORE USING.
2. USE PURGING AND DISINFECTING PROCEDURES PRESCRIBED BY AUTHORITIES HAVING JURISDICTION; IF METHODS ARE NOT PRESCRIBED, USE PROCEDURES DESCRIBED IN EITHER AWWA C651 OR AWWA C652 OR FOLLOW PROCEDURES DESCRIBED BELOW:

a. 1.2 FLUSH PIPING SYSTEM WITH CLEAN, POTABLE WATER UNTIL DIRTY WATER DOES NOT APPEAR AT OUTLETS.

b. FILL AND ISOLATE SYSTEM ACCORDING TO EITHER OF THE FOLLOWING:
1) FILL SYSTEM OR PART THEREOF WITH WATER/CHLORINE SOLUTION WITH AT LEAST 50 PPM OF CHLORINE. ISOLATE WITH VALVES AND ALLOW TO STAND FOR 24 HOURS.
2) FILL SYSTEM OR PART THEREOF WITH WATER/CHLORINE SOLUTION WITH AT LEAST 200 PPM OF CHLORINE. ISOLATE AND ALLOW TO STAND FOR THREE HOURS.

c. FLUSH SYSTEM WITH CLEAN, POTABLE WATER UNTIL NO CHLORINE IS IN WATER COMING FROM SYSTEM AFTER THE STANDING TIME.

d. REPEAT PROCEDURES IF BIOLOGICAL EXAMINATION SHOWS CONTAMINATION.

e. SUBMIT WATER SAMPLES IN STERILE BOTTLES TO AUTHORITIES HAVING JURISDICTION.

B. PREPARE AND SUBMIT REPORTS OF PURGING AND DISINFECTING ACTIVITIES. INCLUDE COPIES OF WATER–SAMPLE APPROVALS FROM AUTHORITIES HAVING JURISDICTION.

C. CLEAN INTERIOR OF DOMESTIC WATER PIPING SYSTEM. REMOVE DIRT AND DEBRIS AS WORK PROGRESSES.

IDENTIFICATION FOR PLUMBING AND EQUIPMENT

1.1 EQUIPMENT LABELS
A. METAL LABELS FOR EQUIPMENT:

1. MATERIAL AND THICKNESS: STAINLESS STEEL, 0.025–INCH MINIMUM THICKNESS, AND HAVING PREDRILLED OR STAMPED HOLES FOR ATTACHMENT HARDWARE.

2. MINIMUM LABEL SIZE: LENGTH AND WIDTH VARY FOR REQUIRED LABEL CONTENT, BUT NOT LESS THAN 2–1/2 BY 3/4 INCH.

3. MINIMUM LETTER SIZE: 1/4 INCH FOR NAME OF UNITS IF VIEWING DISTANCE IS LESS THAN 24 INCHES , 1/2 INCH FOR VIEWING DISTANCES UP TO 72 INCHES, AND PROPORTIONATELY LARGER LETTERING FOR GREATER VIEWING DISTANCES. INCLUDE SECONDARY LETTERING TWO–THIRDS TO THREE–FOURTHS THE SIZE OF PRINCIPAL LETTERING.

4. FASTENERS: STAINLESS–STEEL RIVETS OR SELF–TAPPING SCREWS.

5. ADHESIVE: CONTACT–TYPE PERMANENT ADHESIVE, COMPATIBLE WITH LABEL AND WITH SUBSTRATE.

B. LABEL CONTENT: INCLUDE EQUIPMENT'S DRAWING DESIGNATION OR UNIQUE EQUIPMENT NUMBER, DRAWING NUMBERS WHERE EQUIPMENT IS INDICATED (PLANS, DETAILS, AND SCHEDULES), TITLE WHERE EQUIPMENT IS SPECIFIED.

C. EQUIPMENT LABEL SCHEDULE: FOR EACH ITEM OF EQUIPMENT TO BE LABELED, ON 8–1/2–BY–11–INCH (A4) BOND PAPER. TABULATE EQUIPMENT IDENTIFICATION NUMBER AND IDENTIFY DRAWING NUMBERS WHERE EQUIPMENT IS INDICATED (PLANS, DETAILS, AND SCHEDULES), PLUS THE SPECIFICATION SECTION NUMBER AND TITLE WHERE EQUIPMENT IS SPECIFIED. EQUIPMENT SCHEDULE SHALL BE INCLUDED IN OPERATION AND MAINTENANCE DATA.

1.2 PIPE LABELS
A. GENERAL REQUIREMENTS FOR MANUFACTURED PIPE LABELS: PREPRINTED, COLOR–CODED, WITH LETTERING INDICATING SERVICE, AND SHOWING FLOW DIRECTION.
B. PRETENSIONED PIPE LABELS: PRECOILED, SEMIRIGID PLASTIC FORMED TO COVER FULL CIRCUMFERENCE OF PIPE AND TO ATTACH TO PIPE WITHOUT FASTENERS OR ADHESIVE.
C. SELF–ADHESIVE PIPE LABELS: PRINTED PLASTIC WITH CONTACT–TYPE, PERMANENT–ADHESIVE BACKING.
D. PIPE LABEL CONTENTS: INCLUDE IDENTIFICATION OF PIPING SERVICE USING SAME DESIGNATIONS OR ABBREVIATIONS AS USED ON DRAWINGS, PIPE SIZE, AND AN ARROW INDICATING FLOW DIRECTION.

1. FLOW–DIRECTION ARROWS: INTEGRAL WITH PIPING SYSTEM SERVICE LETTERING TO ACCOMMODATE BOTH DIRECTIONS, OR AS SEPARATE UNIT ON EACH PIPE LABEL TO INDICATE FLOW DIRECTION.

2. LETTERING SIZE: AT LEAST 1–1/2 INCHES HIGH.

NO.	DATE	DESCRIPTION	BY	APP.
0	11/02/12	ISSUED FOR RESTROOM PERMIT		

TABLE OF REVISIONS
CHECK WITH TRACING TO SEE IF YOU HAVE LATEST REVISION

REFERENCE INFORMATION & FILE NO. OF SURVEYS

PORT OF SAN FRANCISCO

SAN FRANCISCO PORT COMMISSION
PORT OF SAN FRANCISCO
DEPARTMENT OF ENGINEERING

DESIGNED: AK DATE: 10/26/12
DRAWN: RH DATE: 10/26/12
CHECKED: PM DATE: 10/26/12

APPROVED BY SAN FRANCISCO PORT COMMISSION
DATE: _____
CHIEF HARBOR ENGINEER

SCALE: NONE
SHEET OF SHEETS _ OF _

PIER 29
RESTROOM REMODEL
PLUMBING SPECIFICATIONS

CONTRACT NO.
DRAWING NO. P0.3
FILE NO. XXXX–29–S
REV. NO.

VIEW: PLOT1

ESCUTCHEONS FOR PLUMBING PIPING

1.1 INSTALL ESCUTCHEONS AS FOLLOWS FOR PENETRATIONS OF CEILINGS, FLOORS, AND WALLS.

A. PIPING WITH FITTING OR SLEEVE PROTRUDING FROM WALL: ONE PIECE, DEEP PATTERN.

B. BARE PIPING AT WALL AND FLOOR PENETRATIONS IN FINISHED SPACES: ONE PIECE, CAST BRASS WITH POLISHED CHROME-PLATED FINISH.

C. BARE PIPING AT CEILING PENETRATIONS IN FINISHED SPACES: ONE PIECE, CAST BRASS WITH POLISHED CHROME-PLATED FINISH.

D. INSULATED PIPING: ONE PIECE STAMP STEEL TYPE.

1.2 ESCUTCHEONS

A. ONE PIECE, CAST BRASS: POLISHED, CHROME-PLATED FINISH WITH SETSCREWS.

B. ONE PIECE, STAMPED STEEL: CHROME-PLATED FINISH WITH SPRING CLIPS.

C. DEEP PATTERN TYPE: DEEP DRAWN, BOX SHAPED WITH CHROME-PLATED FINISH AND SPRING CLIPS.

D. SPLIT-CASTING FLOOR PLATES: CAST BRASS WITH CONCEALED HINGE.

DOMESTIC PIPING INSULATION

1.1 DOMESTIC HOT WATER PIPING INSULATION

A. PRODUCTS: SUBJECT TO COMPLIANCE WITH REQUIREMENTS, PROVIDE ONE OF THE FOLLOWING:

1. AEROFLEX USA, INC.; AEROCEL.
2. ARMACELL LLC; AP ARMAFLEX.
3. K-FLEX USA; INSUL-LOCK, INSUL-TUBE, AND K-FLEX LS.

B. ALL PIPE SIZES: INSULATION SHALL BE FLEXIBLE ELASTOMERIC: 1 INCH THICK.

C. FINISHES: AFTER ADHESIVE HAS FULLY CURED, APPLY TWO COATS OF INSULATION MANUFACTURER'S RECOMMENDED PROTECTIVE COATING.

SLEEVES AND SLEEVE SEALS FOR PLUMBING PIPING

1.1 SLEEVES

A. GALVANIZED-STEEL-PIPE SLEEVES: ASTM A 53/A 53M, TYPE E, GRADE B, SCHEDULE 40, ZINC COATED, WITH PLAIN ENDS.

B. CAST IRON WALL PIPES: FABRICATED OF CAST IRON, AND EQUIVALENT TO DUCTILE-IRON PRESSURE PIPE, WITH PLAIN ENDS AND INTEGRAL WATERSTOP UNLESS OTHERWISE INDICATED.

1.2 SLEEVE-SEAL SYSTEMS

A. MANUFACTURERS: SUBJECT TO COMPLIANCE WITH REQUIREMENTS, PROVIDE PRODUCTS BY ONE OF THE FOLLOWING:

1. ADVANCE PRODUCTS & SYSTEMS, INC.
2. CALPICO, INC.
3. METRAFLEX COMPANY (THE).
4. PIPELINE SEAL AND INSULATOR, INC.

B. DESCRIPTION: MODULAR SEALING-ELEMENT UNIT, DESIGNED FOR FIELD ASSEMBLY, FOR FILLING ANNULAR SPACE BETWEEN PIPING AND SLEEVE.

1. SEALING ELEMENTS: EPDM-RUBBER INTERLOCKING LINKS SHAPED TO FIT SURFACE OF PIPE. INCLUDE TYPE AND NUMBER REQUIRED FOR PIPE MATERIAL AND SIZE OF PIPE.
2. PRESSURE PLATES: STAINLESS STEEL.
3. CONNECTING BOLTS AND NUTS: STAINLESS STEEL OF LENGTH REQUIRED TO SECURE PRESSURE PLATES TO SEALING ELEMENTS.

GENERAL DUTY VALVES FOR PLUMBING PIPING

A. CLASS 125, BRONZE ANGLE VALVES WITH BRONZE DISC:
1. MANUFACTURERS: SUBJECT TO COMPLIANCE WITH REQUIREMENTS, PROVIDE PRODUCTS BY ONE OF THE FOLLOWING:

a. HAMMOND VALVE.
b. MILWAUKEE VALVE COMPANY.
c. OR APPROVED EQUAL.

2. DESCRIPTION:
a. STANDARD: MSS SP-80, TYPE 1.
b. CWP RATING: 200 PSIG
c. BODY MATERIAL: ASTM B 62, BRONZE WITH INTEGRAL SEAT AND SCREW-IN BONNET.
4. ENDS: THREADED.
5. STEM AND DISC: BRONZE.
6. PACKING: ASBESTOS FREE.
7. HANDWHEEL: MALLEABLE IRON , BRONZE, OR ALUMINUM.

1.2 TWO-PIECE, FULL-PORT, BRONZE BALL VALVES WITH STAINLESS-STEEL TRIM:

A. MANUFACTURERS: SUBJECT TO COMPLIANCE WITH REQUIREMENTS, PROVIDE PRODUCTS BY ONE OF THE FOLLOWING:

1. CRANE CO,; CRANE VALVE GROUP, CRANE VALVES.
2. MILWAUKEE VALVE COMPANY.
3. NIBCO INC.

B. DESCRIPTION:
1. STANDARD: MSS SP-110.
2. CWP RATING: 600 PSIG
3. BODY DESIGN: TWO PIECE.
4. BODY MATERIAL: BRONZE.
5. ENDS: THREADED.
6. SEATS: PTFE OR TFE.
7. STEM: STAINLESS STEEL.
8. BALL: STAINLESS STEEL, VENTED.
9. PORT: FULL.

1.3. ADJUSTING

A. ADJUST OR REPLACE VALVE PACKING AFTER PIPING SYSTEMS HAVE BEEN TESTED AND PUT INTO SERVICE BUT BEFORE FINAL ADJUSTING AND BALANCING. REPLACE VALVES IF PERSISTENT LEAKING OCCURS.

B. SELECT VALVES, EXCEPT WAFER TYPES, WITH THE FOLLOWING END CONNECTIONS:

1. FOR COPPER TUBING, NPS 2 AND SMALLER: THREADED ENDS.
2. FOR COPPER TUBING, NPS 2-1/2 TO NPS 4 : FLANGED ENDS

SANITARY WASTE AND VENT PIPING

1.1 PIPING MATERIALS

A. HUBLESS CAST-IRON SOIL PIPE AND FITTINGS

B. PIPE AND FITTINGS: ASTM A 888 OR CISPI 301.

C. SOVENT STACK FITTINGS: ASME B16.45 OR ASSE 1043, HUBLESS, CAST-IRON AERATOR AND DEAERATOR DRAINAGE FITTINGS.

D. SHIELDED COUPLINGS: ASTM C 1277 ASSEMBLY OF METAL SHIELD OR HOUSING, CORROSION-RESISTANT FASTENERS, AND RUBBER SLEEVE WITH INTEGRAL, CENTER PIPE STOP.

1. HEAVY-DUTY, SHIELDED, STAINLESS-STEEL COUPLINGS: WITH STAINLESS-STEEL SHIELD, STAINLESS-STEEL BANDS AND TIGHTENING DEVICES, AND ASTM C 564, RUBBER SLEEVE.

a. AVAILABLE MANUFACTURERS:
1) ANACO.
2) CLAMP-ALL CORP.
3) IDEAL DIV.; STANT CORP.
4) MISSION RUBBER CO.
5) TYLER PIPE; SOIL PIPE DIV.

1.2 PIPING APPLICATIONS

A. ABOVEGROUND, SOIL, WASTE, AND VENT PIPING NPS 4 AND SMALLER SHALL BE:
1. HUBLESS CAST-IRON SOIL PIPE AND FITTINGS; HEAVY-DUTY SHIELDED, STAINLESS-STEEL COUPLINGS; AND HUBLESS-COUPLING JOINTS.

B. UNDERGROUND, SOIL, WASTE, AND VENT PIPING NPS AND SMALLER SHALL BE:
1. HUBLESS CAST-IRON SOIL PIPE AND FITTINGS; HEAVY-DUTY SHIELDED, STAINLESS-STEEL COUPLINGS; AND HUBLESS-COUPLING JOINTS.

C. CONNECTIONS
1. DRAWINGS INDICATE GENERAL ARRANGEMENT OF PIPING, FITTINGS, AND SPECIALTIES.
2. CONNECT SOIL AND WASTE PIPING TO EXTERIOR SANITARY SEWERAGE PIPING. USE TRANSITION FITTING TO JOIN DISSIMILAR PIPING MATERIALS.
3. CONNECT DRAINAGE AND VENT PIPING TO THE FOLLOWING:

a. PLUMBING FIXTURES: CONNECT DRAINAGE PIPING IN SIZES INDICATED, BUT NOT SMALLER THAN REQUIRED BY PLUMBING CODE.
b. PLUMBING FIXTURES AND EQUIPMENT: CONNECT ATMOSPHERIC VENT PIPING IN SIZES INDICATED, BUT NOT SMALLER THAN REQUIRED BY AUTHORITIES HAVING JURISDICTION.

Creegan+D'Angelo INFRASTRUCTURE ENGINEERS
170 Columbus Ave., Suite 240
San Francisco, CA 94133
Tel (415) 834-2010
Fax (415) 834-2011
www.cdengineers.com

YEI ENGINEERS, INC.
7700 Edgewater Drive, Suite 128, Oakland, CA 94621
Phone: (510) 383-1050 Fax: (510) 383-1057

REGISTERED PROFESSIONAL ENGINEER
PATRICK R. MALLILIN
NO. M 30258
EXP. 06/30/13
MECHANICAL
STATE OF CALIFORNIA

c. PLUMBING SPECIALTIES: CONNECT DRAINAGE AND VENT PIPING IN SIZES INDICATED, BUT NOT SMALLER THAN REQUIRED BY PLUMBING CODE.

1.3 FIELD QUALITY CONTROL

A. DURING INSTALLATION, NOTIFY AUTHORITIES HAVING JURISDICTION AT LEAST 24 HOURS BEFORE INSPECTION MUST BE MADE. PERFORM TESTS SPECIFIED BELOW IN PRESENCE OF AUTHORITIES HAVING JURISDICTION.

1. ROUGHING-IN INSPECTION: ARRANGE FOR INSPECTION OF PIPING BEFORE CONCEALING OR CLOSING-IN AFTER ROUGHING-IN AND BEFORE SETTING FIXTURES.
2. FINAL INSPECTION: ARRANGE FOR FINAL INSPECTION BY AUTHORITIES HAVING JURISDICTION TO OBSERVE TESTS SPECIFIED BELOW AND TO ENSURE COMPLIANCE WITH REQUIREMENTS.

B. RE INSPECTION: IF AUTHORITIES HAVING JURISDICTION FIND THAT PIPING WILL NOT PASS TEST OR INSPECTION, MAKE REQUIRED CORRECTIONS AND ARRANGE FOR REINSPECTION.

C. REPORTS: PREPARE INSPECTION REPORTS AND HAVE THEM SIGNED BY AUTHORITIES HAVING JURISDICTION.

D. TEST SANITARY DRAINAGE AND VENT PIPING ACCORDING TO PROCEDURES OF AUTHORITIES HAVING JURISDICTION OR, IN ABSENCE OF PUBLISHED PROCEDURES, AS FOLLOWS:

1. TEST FOR LEAKS AND DEFECTS IN NEW PIPING AND PARTS OF EXISTING PIPING THAT HAVE BEEN ALTERED, EXTENDED, OR REPAIRED. IF TESTING IS PERFORMED IN SEGMENTS, SUBMIT SEPARATE REPORT FOR EACH TEST, COMPLETE WITH DIAGRAM OF PORTION OF PIPING TESTED.
2. LEAVE UNCOVERED AND UNCONCEALED NEW, ALTERED, EXTENDED, OR REPLACED DRAINAGE AND VENT PIPING UNTIL IT HAS BEEN TESTED AND APPROVED. EXPOSE WORK THAT WAS COVERED OR CONCEALED BEFORE IT WAS TESTED.
3. ROUGHING-IN PLUMBING TEST PROCEDURE: TEST DRAINAGE AND VENT PIPING, EXCEPT OUTSIDE LEADERS, ON COMPLETION OF ROUGHING-IN. CLOSE OPENINGS IN PIPING SYSTEM AND FILL WITH WATER TO POINT OF OVERFLOW, BUT NOT LESS THAN 10-FOOT HEAD OF WATER. FROM 15 MINUTES BEFORE INSPECTION STARTS TO COMPLETION OF INSPECTION, WATER LEVEL MUST NOT DROP. INSPECT JOINTS FOR LEAKS.
4. FINISHED PLUMBING TEST PROCEDURE: AFTER PLUMBING FIXTURES HAVE BEEN SET AND TRAPS FILLED WITH WATER, TEST CONNECTIONS AND PROVE THEY ARE GASTIGHT AND WATERTIGHT. PLUG VENT-STACK OPENINGS ON ROOF AND BUILDING DRAINS WHERE THEY LEAVE BUILDING. INTRODUCE AIR INTO PIPING SYSTEM EQUAL TO PRESSURE OF 1-INCH WG. USE U-TUBE OR MANOMETER INSERTED IN TRAP OF WATER CLOSET TO MEASURE THIS PRESSURE. AIR PRESSURE MUST REMAIN CONSTANT WITHOUT INTRODUCING ADDITIONAL AIR THROUGHOUT PERIOD OF INSPECTION. INSPECT PLUMBING FIXTURE CONNECTIONS FOR GAS AND WATER LEAKS.
5. REPAIR LEAKS AND DEFECTS WITH NEW MATERIALS AND RETEST PIPING, OR PORTION THEREOF, UNTIL SATISFACTORY RESULTS ARE OBTAINED.
6. PREPARE REPORTS FOR TESTS AND REQUIRED CORRECTIVE ACTION.

1.4 JOINT CONSTRUCTION

A. BASIC PIPING JOINT CONSTRUCTION REQUIREMENTS ARE SPECIFIED IN DIVISION 15 SECTION "BASIC MECHANICAL MATERIALS AND METHODS."

B. JOIN HUBLESS CAST-IRON SOIL PIPING ACCORDING TO CISPI 310 AND CISPI'S "CAST IRON SOIL PIPE AND FITTINGS HANDBOOK" FOR HUBLESS-COUPLING JOINTS.

1.5 PIPING INSTALLATION

A. INSTALL CAST-IRON SOIL PIPING ACCORDING TO CISPI'S "CAST IRON SOIL PIPE AND FITTINGS HANDBOOK," CHAPTER IV, "INSTALLATION OF CAST IRON SOIL PIPE AND FITTINGS."

B. MAKE CHANGES IN DIRECTION FOR SOIL AND WASTE DRAINAGE AND VENT PIPING USING APPROPRIATE BRANCHES, BENDS, AND LONG-SWEEP BENDS. SANITARY TEES AND SHORT-SWEEP 1/4 BENDS MAY BE USED ON VERTICAL STACKS IF CHANGE IN DIRECTION OF FLOW IS FROM HORIZONTAL TO VERTICAL. USE LONG-TURN, DOUBLE Y-BRANCH AND 1/8-BEND FITTINGS IF 2 FIXTURES ARE INSTALLED BACK TO BACK OR SIDE BY SIDE WITH COMMON DRAIN PIPE. STRAIGHT TEES, ELBOWS, AND CROSSES MAY BE USED ON VENT LINES. DO NOT CHANGE DIRECTION OF FLOW MORE THAN 90 DEGREES. USE PROPER SIZE OF STANDARD INCREASERS AND REDUCERS IF PIPES OF DIFFERENT SIZES ARE CONNECTED. REDUCING SIZE OF DRAINAGE PIPING IN DIRECTION OF FLOW IS PROHIBITED.

NO.	DATE	DESCRIPTION	BY	APP.
0	11/02/12	ISSUED FOR RESTROOM PERMIT		

TABLE OF REVISIONS
CHECK WITH TRACING TO SEE IF YOU HAVE LATEST REVISION

REFERENCE INFORMATION & FILE NO. OF SURVEYS

PORT OF SAN FRANCISCO

SAN FRANCISCO PORT COMMISSION
PORT OF SAN FRANCISCO
DEPARTMENT OF ENGINEERING

DESIGNED: AK DATE: 10/26/12
DRAWN: RH DATE: 10/26/12
CHECKED: PM DATE: 10/26/12

APPROVED BY SAN FRANCISCO PORT COMMISSION
DATE: _____
CHIEF HARBOR ENGINEER

SCALE: NONE
SHEET OF SHEETS _ OF _

PIER 29
RESTROOM REMODEL

PLUMBING SPECIFICATIONS

CONTRACT NO.
DRAWING NO. P0.4
FILE NO. XXXX-29-S
REV. NO.

VIEW: PLOT1

Creegan+D'Angelo
INFRASTRUCTURE ENGINEERS
170 Columbus Ave., Suite 240
San Francisco, CA 94133
Tel (415) 834-2010
Fax (415) 834-2011
www.cdengineers.com

YEI ENGINEERS, INC.
7700 Edgewater Drive, Suite 128, Oakland, CA 94621
Phone: (510) 383-1050 Fax: (510) 383-1057

REGISTERED PROFESSIONAL ENGINEER
PATRICK R. MALLILIN
NO. M 30258
EXP. 06/30/13
MECHANICAL
STATE OF CALIFORNIA

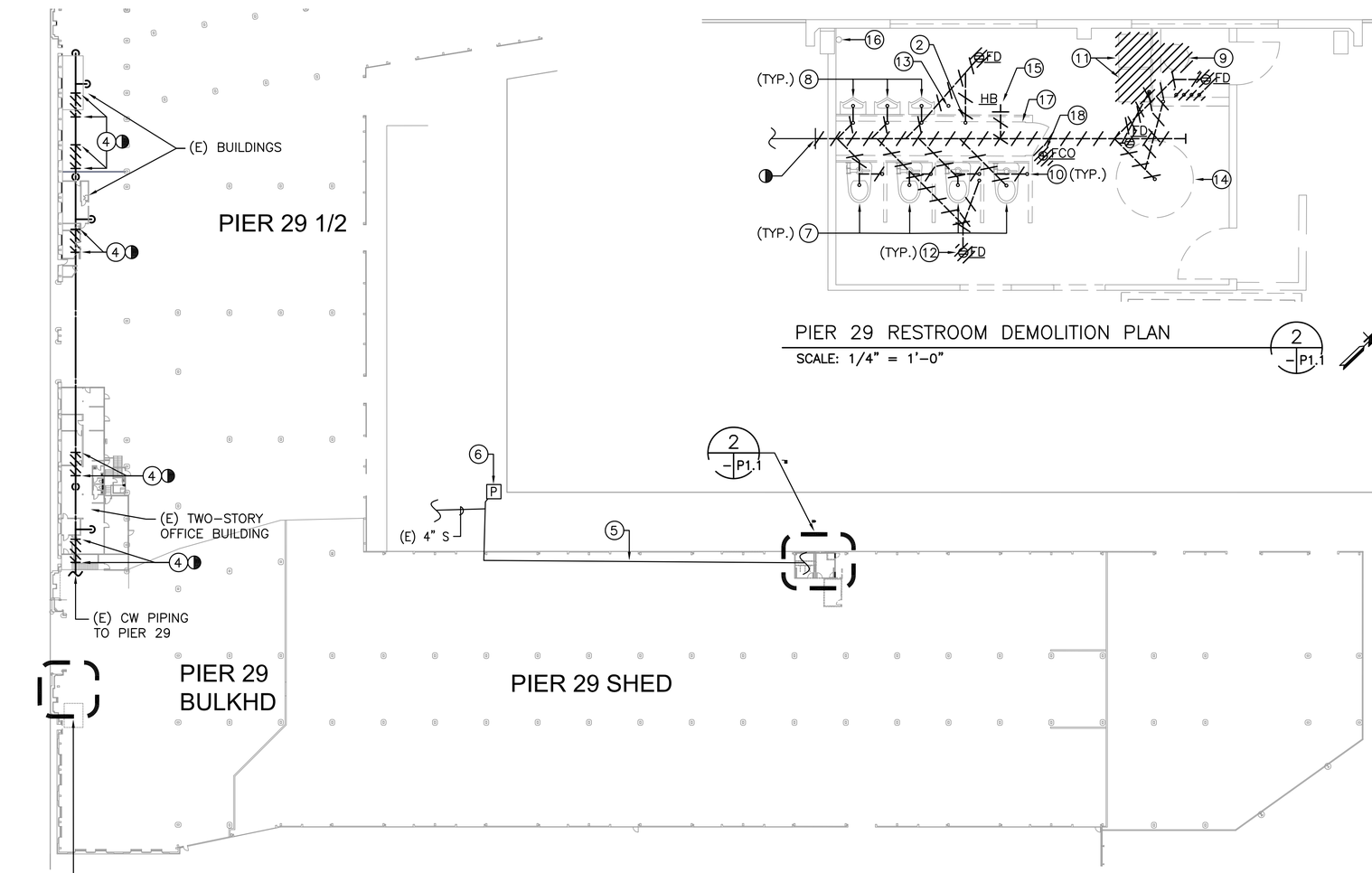

PIER 29 & 29 1/2 RESTROOM DEMOLITION PLAN
SCALE: 1" = 40'-0"
1 -P1.1

PIER 29 RESTROOM DEMOLITION PLAN
SCALE: 1/4" = 1'-0"
2 -P1.1

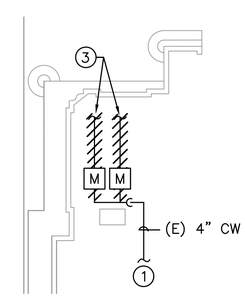

PIER 29 ENLARGED DEMOLITION PLAN
SCALE: 1/4" = 1'-0"
3 -P1.1

SHEET NOTES:

1. THE CONTRACTOR SHALL VERIFY (E) CONDITIONS IN FIELD PRIOR TO START OF WORK.
2. PLUMBING FIXTURES (WATER CLOSETS AND URINALS) TO BE SALVAGED FOR THE PARTS.

KEY NOTES:

1. (E) 4" CW SUPPLY PIPING AT 8' AFF.
2. (E) VTR AND ASSOCIATED APPURTENANCES TO BE REMOVED.
3. (E) 4" CW PIPING TO TEMPORARY WATER PIPING WITH WATER METERS FOR PIERS 29 AND 29 1/2. TEMPORARY WATER PIPING TO BE REMOVED BY THE PORT. WATER METERS TO BE RE-USED FOR NEW WORK. COORDINATE WITH THE PORT.
4. CUT AND PERMANENTLY CAP (E) CW SUPPLY PIPING. FIELD VERIFY (E) CW PIPING LOCATION(S) AND SIZE(S) PRIOR TO REMOVAL.
5. (E) 4" SEWER GRAVITY LINE TO REMAIN.
6. (E) PUMPING STATION TO REMAIN.
7. (E) WATER CLOSET INCLUDING CONNECTED CW AND S PIPING AND ASSOCIATED APPURTENANCES TO BE REMOVED.
8. (E) URINAL INCLUDING CONNECTED CW AND S PIPING AND ASSOCIATED APPURTENANCES TO BE REMOVED.
9. (E) DOMESTIC WATER HEATER AND ASSOCIATED APPURTENANCES TO BE REMOVED.
10. (E) VENT PIPING AND ASSOCIATED APPURTENANCES TO BE REMOVED.
11. (E) UTILITY SINK INCLUDING CONNECTED CW AND HW PIPING AND ASSOCIATED APPURTENANCES TO BE REMOVED.
12. (E) FLOOR DRAIN INCLUDING CONNECTED S PIPING AND ASSOCIATED APPURTENANCES TO BE REMOVED.
13. (E) CAPPED S PIPING AND ASSOCIATED APPURTENANCES TO BE REMOVED.
14. (E) HANDWASHING SINK/BASIN INCLUDING CONNECTED CW AND HW PIPING AND ASSOCIATED APPURTENANCES TO BE REMOVED.
15. (E) HOSE BIBB INCLUDING CONNECTED CW PIPING AND ASSOCIATED APPURTENANCES TO BE REMOVED.
16. (E) ROOF DRAIN PIPING RISER TO REMAIN. PROTECT IN PLACE.
17. (E) WATER METER LOCATED WITHIN MAINTENANCE CHASE TO BE SALVAGED FOR THE PORT.
18. (E) FLOOR CLEAN OUT INCLUDING CONNECTED S PIPING AND ASSOCIATED APPURTENANCES TO BE REMOVED.

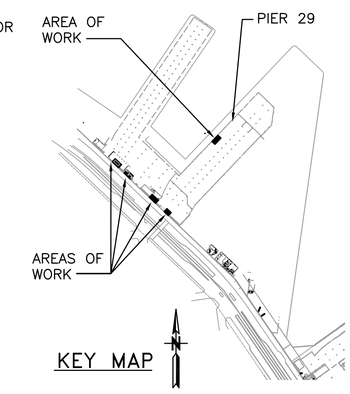

KEY MAP

NO.	DATE	DESCRIPTION	BY	APP.
0	11/02/12	ISSUED FOR RESTROOM PERMIT		

TABLE OF REVISIONS
CHECK WITH TRACING TO SEE IF YOU HAVE LATEST REVISION

REFERENCE INFORMATION & FILE NO. OF SURVEYS

PORT OF SAN FRANCISCO

SAN FRANCISCO PORT COMMISSION
PORT OF SAN FRANCISCO
DEPARTMENT OF ENGINEERING

DESIGNED: AK DATE: 10/26/12
DRAWN: RH DATE: 10/26/12
CHECKED: PM DATE: 10/26/12

APPROVED BY SAN FRANCISCO PORT COMMISSION
DATE: _____
CHIEF HARBOR ENGINEER

SCALE: AS SHOWN
SHEET OF SHEETS _ OF _

PIER 29
RESTROOM REMODEL
PLUMBING
DEMOLITION FLOOR PLANS

CONTRACT NO.
DRAWING NO. P1.1
FILE NO. XXXX-29-S
REV. NO.

VIEW: PLOT1

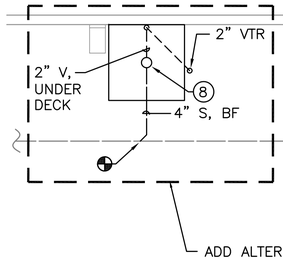

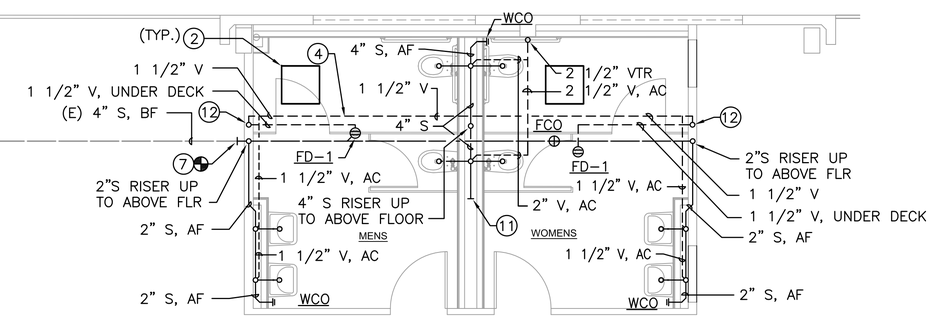

S & V PIPING ENLARGED PLAN (2 / P2.1)

SCALE: 1/4" = 1'-0"

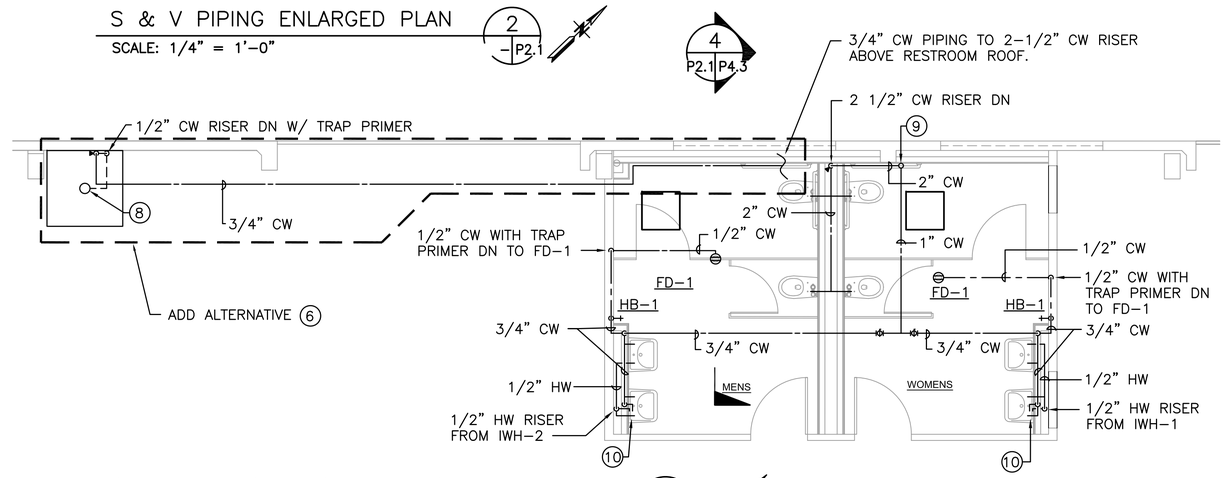

CW & HW PIPING ENLARGED PLAN (3 / P2.1)

SCALE: 1/4" = 1'-0"

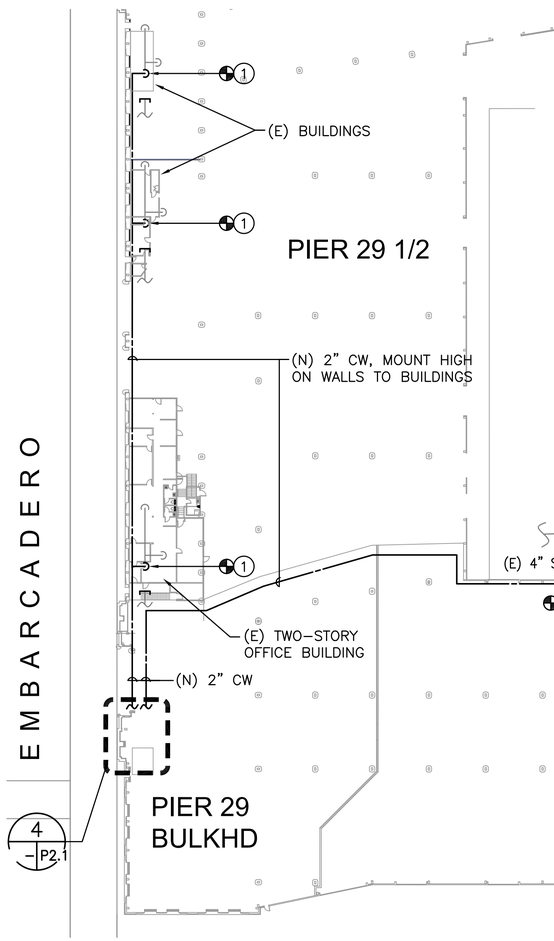

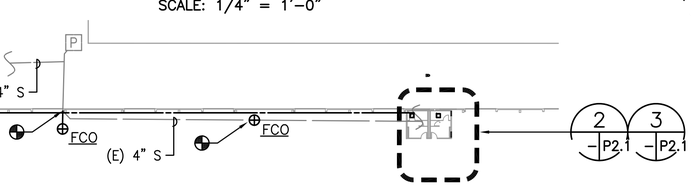

PIER 29 RESTROOM NEW WORK PLAN (1 / P2.1)

SCALE: 1" = 40'-0"

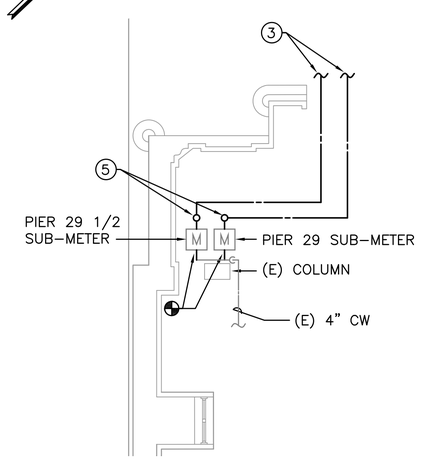

PIER 29 ENLARGED PLAN (4 / P2.1)

SCALE: 1/4" = 1'-0"

Creegan+D'Angelo INFRASTRUCTURE ENGINEERS
170 Columbus Ave., Suite 240
San Francisco, CA 94133
Tel (415) 834-2010
Fax (415) 834-2011
www.cdengineers.com

YEI ENGINEERS, INC.
7700 Edgewater Drive, Suite 128, Oakland, CA 94621
Phone: (510) 383-1050 Fax: (510) 383-1057

REGISTERED PROFESSIONAL ENGINEER
PATRICK R. MALLILIN
NO. M 30258
EXP. 06/30/13
MECHANICAL
STATE OF CALIFORNIA

SHEET NOTE:

1. THE CONTRACTOR SHALL VERIFY (E) CONDITIONS IN FIELD PRIOR TO START OF WORK.
2. PROVIDE LATERAL BRACING, SS HANGERS INCLUDING HARDWARE AND 4-BAND TYPE NO-HUB COUPLINGS PER 2010 PORT OF SF PLUMBING CODE FOR REQUIREMENTS OF UNDER-PIER PIPING, PER SECTION 314.0.

KEY NOTES:

1. CONNECT (N) 2" CW PIPING TO (E) CW PIPING. FIELD VERIFY (E) CW PIPING LOCATION(S) AND SIZE(S) PRIOR TO STARTING WORK.
2. CEILING ACCESS DOOR. REFER TO ARCHITECTURAL DRAWINGS FOR SPECIFICATIONS.
3. (N) 2" CW PIPING. SEE DETAIL 1 ON THIS SHEET FOR CONTINUATION.
4. MOUNT V PIPING TIGHT TO UNDERSIDE OF RESTROOM ROOF TO AVOID CEILING ACCESS DOORS.
5. (N) 2" CW RISER TO ROOF TRUSS SYSTEM.
6. PROVIDE ADD ALTERNATE BID FOR PORTABLE DRAIN CONNECTION.
7. CONNECT (N) 4" S TO (E) 4" S PIPING BELOW FLOOR.
8. PORTABLE DRAINAGE HOSE CONNECTION WITH P-TRAP UNDER DECK.
9. (N) 2 1/2" CW RISER DOWN TO ABOVE CEILING.
10. TANKLESS WATER HEATER IWH-1 BELOW LAVATORY.
11. (N) 4" S PIPING BELOW FLOOR CAP FOR FUTURE CONNECTION.
12. (N) 1 1/2" V PIPING DOWN TO FLOOR DRAIN BELOW FLOOR.

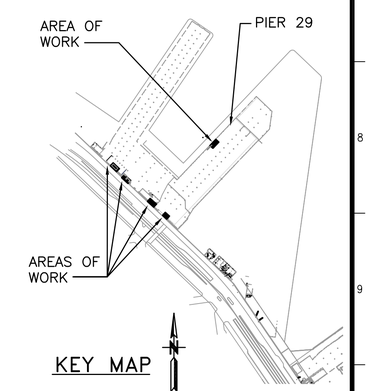

KEY MAP

NO.	DATE	DESCRIPTION	BY	APP.
0	11/02/12	ISSUED FOR RESTROOM PERMIT		

TABLE OF REVISIONS
CHECK WITH TRACING TO SEE IF YOU HAVE LATEST REVISION

REFERENCE INFORMATION & FILE NO. OF SURVEYS

SAN FRANCISCO PORT COMMISSION
PORT OF SAN FRANCISCO
DEPARTMENT OF ENGINEERING

DESIGNED: AK	DATE: 10/26/12
DRAWN: RH	DATE: 10/26/12
CHECKED: PM	DATE: 10/26/12

APPROVED BY SAN FRANCISCO PORT COMMISSION
DATE: _____
CHIEF HARBOR ENGINEER

SCALE: AS SHOWN
SHEET OF SHEETS _ OF _

PIER 29 RESTROOM REMODEL

PLUMBING FLOOR PLANS NEW WORK

CONTRACT NO.
DRAWING NO. P2.1
FILE NO. XXXX-29-S
REV. NO.

VIEW: PLOT1

Creegan+D'Angelo
INFRASTRUCTURE ENGINEERS
170 Columbus Ave., Suite 240
San Francisco, CA 94133
Tel (415) 834-2010
Fax (415) 834-2011
www.cdengineers.com

YEI ENGINEERS, INC.
7700 Edgewater Drive, Suite 128, Oakland, CA 94621
Phone: (510) 383-1050 Fax: (510) 383-1057

REGISTERED PROFESSIONAL ENGINEER
PATRICK R. MALLILIN
NO. M 30258
EXP. 06/30/13
MECHANICAL
STATE OF CALIFORNIA

PIER 29 – NEW WORK PHOTO 1 / P2.2
NTS

PIER 29 – NEW WORK PHOTO 2 / P2.2
NTS

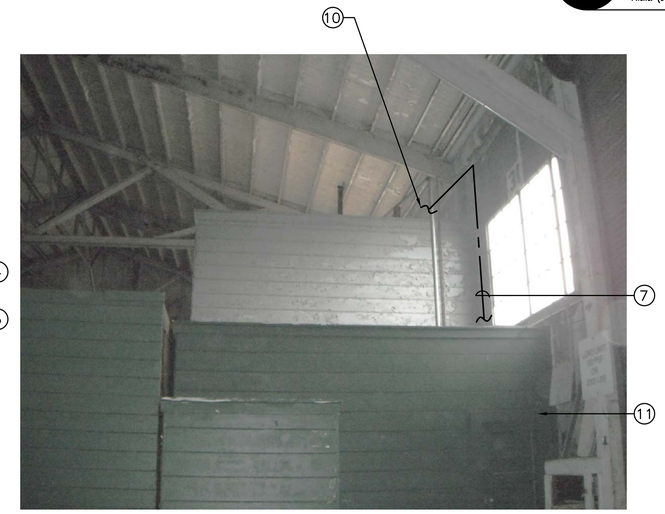

PIER 29 – NEW WORK PHOTO 3 / P2.2
NTS

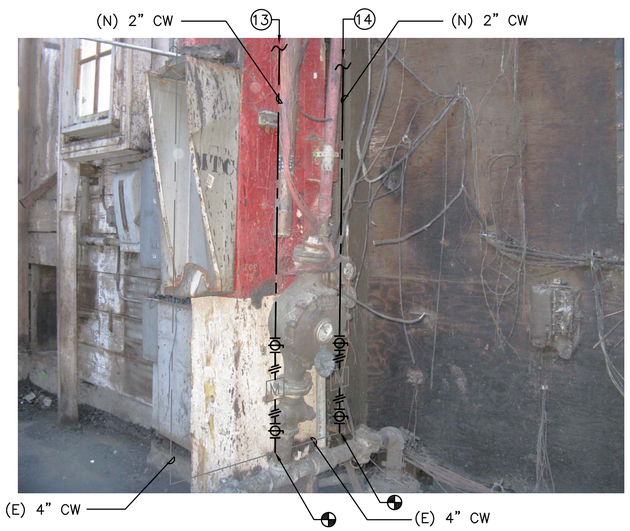

PIER 29 – NEW WORK PHOTO 4 / P2.2
NTS

PIER 29–1/2 – NEW WORK PHOTO 5 / P2.2
NTS

KEY NOTES:

1. CONNECT (N) 2" CW PIPING TO (E) PIER 29 WATER SUB–METER.
2. (N) 2" CW PIPING TO PIER 29.
3. (N) 2" CW PIPING. SEE DETAIL 1 ON THIS SHEET FOR CONTINUATION.
4. MOUNT (N) 2" CW PIPING HIGH ON WALL.
5. (N) 2" CW PIPING. SEE DETAIL 3 ON THIS SHEET FOR CONTINUATION.
6. CONNECT (N) 2" CW PIPING TO (E) PIER 29–1/2 WATER SUB–METER.
7. (N) 2" CW PIPING. SEE PLUMBING NEW WORK FLOOR PLAN FOR CONTINUATION.
8. (N) 2" CW PIPING TO PIER 29–1/2.
9. (N) 2" CW PIPING TO NEXT BLDG. SEE PLUMBING NEW WORK FLOOR PLAN FOR CONTINUATION.
10. (N) 2" CW PIPING. SEE DETAIL 2 ON THIS SHEET FOR CONTINUATION.
11. (E) RESTROOM TO BE REMODELED SEE ARCHITECTURAL PLANS FOR ADDITIONAL INFORMATION.
12. CONNECT (N) 2" CW PIPING TO (E) CW PIPING SUPPLY LINE FOR 2 STORY OFFICE BUILDING.
13. (N) 2" CW RISER TO SERVE PIER 29.
14. (N) 2" CW RISER TO SERVE PIER 29–1/2.

NO.	DATE	DESCRIPTION	BY	APP.
0	11/02/12	ISSUED FOR RESTROOM PERMIT		

TABLE OF REVISIONS
CHECK WITH TRACING TO SEE IF YOU HAVE LATEST REVISION

REFERENCE INFORMATION & FILE NO. OF SURVEYS

PORT OF SAN FRANCISCO

SAN FRANCISCO PORT COMMISSION
PORT OF SAN FRANCISCO
DEPARTMENT OF ENGINEERING

DESIGNED: AK	DATE: 10/26/12	
DRAWN: RH	DATE: 10/26/12	
CHECKED: PM	DATE: 10/26/12	

APPROVED BY
SAN FRANCISCO PORT COMMISSION
DATE: _____
CHIEF HARBOR ENGINEER

SCALE: NONE
SHEET OF SHEETS _ OF _

PIER 29
RESTROOM REMODEL

PLUMBING
NEW WORK PHOTOS

CONTRACT NO.
DRAWING NO. P2.2
FILE NO. XXXX–29–S
REV. NO.

VIEW: PLOT1

Creegan+D'Angelo
INFRASTRUCTURE ENGINEERS
170 Columbus Ave., Suite 240
San Francisco, CA 94133
Tel (415) 834-2010
Fax (415) 834-2011
www.cdengineers.com

YEI ENGINEERS, INC.
7700 Edgewater Drive, Suite 128, Oakland, CA 94621
Phone: (510) 383-1050 Fax: (510) 383-1057

REGISTERED PROFESSIONAL ENGINEER
PATRICK R. MALLILIN
NO. M 30258
EXP. 06/30/13
MECHANICAL
STATE OF CALIFORNIA

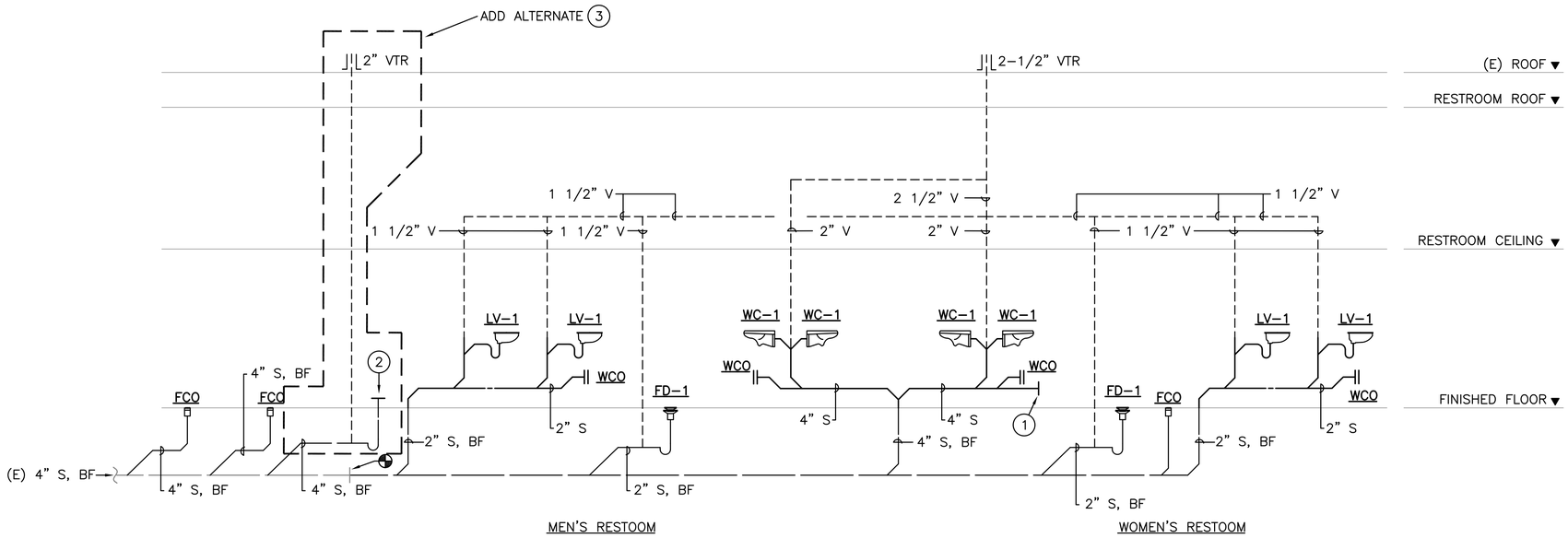

PIER 29 RESTROOM S & V PIPING SCHEMATIC DIAGRAM (1 / P3.1)

NTS

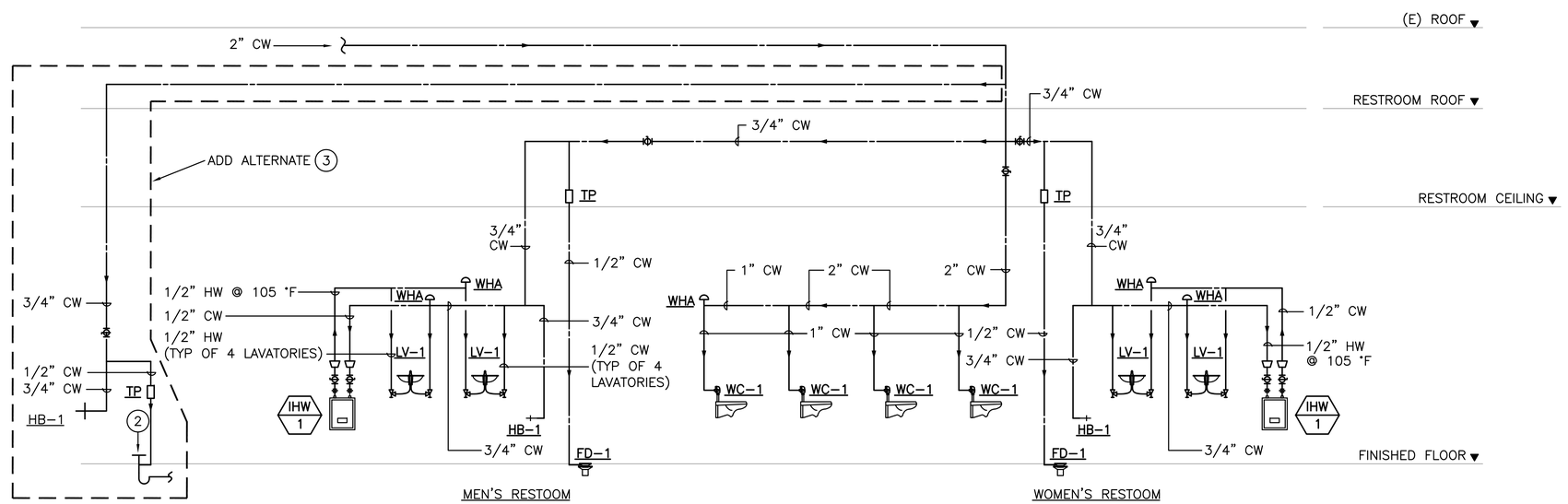

PIER 29 RESTROOM CW, HW & HWR PIPING SCHEMATIC DIAGRAM (2 / P3.1)

NTS

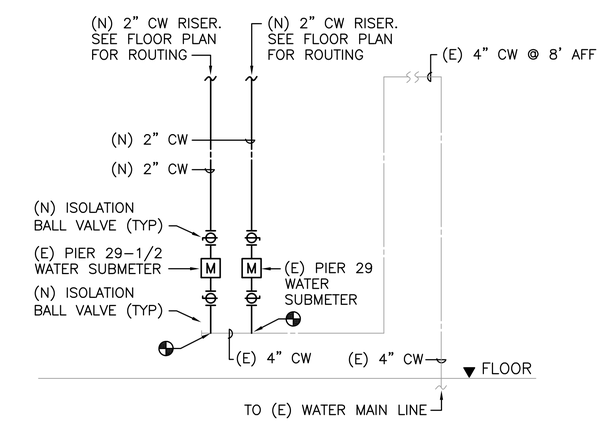

PIERS 29 & 29-1/2 PIPING DIAGRAM (3 / P3.1)

NTS

SHEET NOTE:

1. THE CONTRACTOR SHALL VERIFY (E) CONDITIONS IN FIELD PRIOR TO START OF WORK.
2. PROVIDE LATERAL BRACING, SS HANGERS INCLUDING HARDWARE AND 4-BAND TYPE NO-HUB COUPLINGS PER 2010 PORT OF SF PLUMBING CODE FOR REQUIREMENTS OF UNDER-PIER PIPING, PER SECTION 314.0.

KEY NOTES:

1. (N) 4" S PIPING BELOW FLOOR. CAP FOR FUTURE CONNECTION.
2. PORTABLE DRAINAGE HOSE CONNECTION.
3. PROVIDE ADD ALTERNATE BID FOR PORTABLE DRAIN CONNECTION.

NO.	DATE	DESCRIPTION	BY	APP.
0	11/02/12	ISSUED FOR RESTROOM PERMIT		

TABLE OF REVISIONS
CHECK WITH TRACING TO SEE IF YOU HAVE LATEST REVISION

REFERENCE INFORMATION & FILE NO. OF SURVEYS

SAN FRANCISCO PORT COMMISSION
PORT OF SAN FRANCISCO
DEPARTMENT OF ENGINEERING

DESIGNED: AK	DATE: 10/26/12
DRAWN: RH	DATE: 10/26/12
CHECKED: PM	DATE: 10/26/12

APPROVED BY SAN FRANCISCO PORT COMMISSION
DATE: _____
CHIEF HARBOR ENGINEER

SCALE: NONE
SHEET OF SHEETS _ OF _

PIER 29
RESTROOM REMODEL

PLUMBING
SCHEMATIC PIPING DIAGRAMS

CONTRACT NO.
DRAWING NO. P3.1
FILE NO. XXXX-29-S
REV. NO.

VIEW: PLOT1

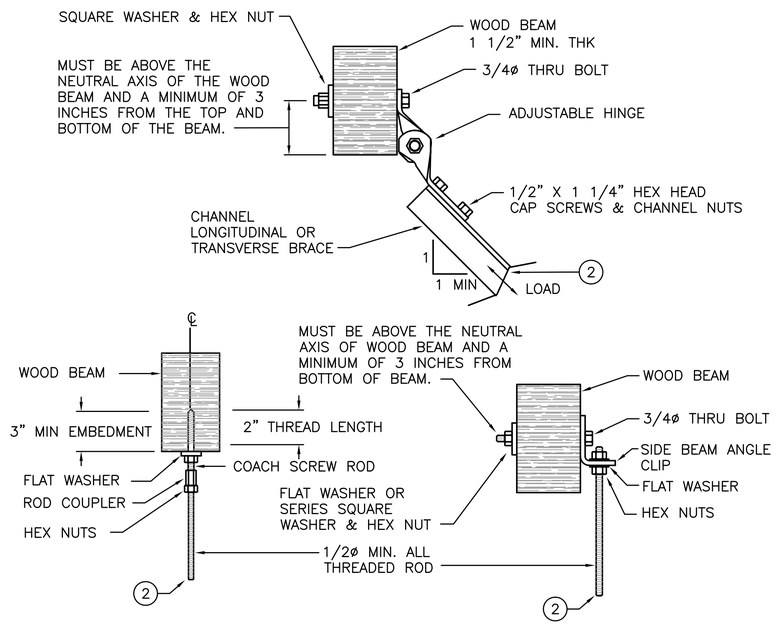

TYPICAL WOOD BEAM MECHANICAL SUPPORT AND SEISMIC ATTACHMENTS (1 / P4.1)

NTS

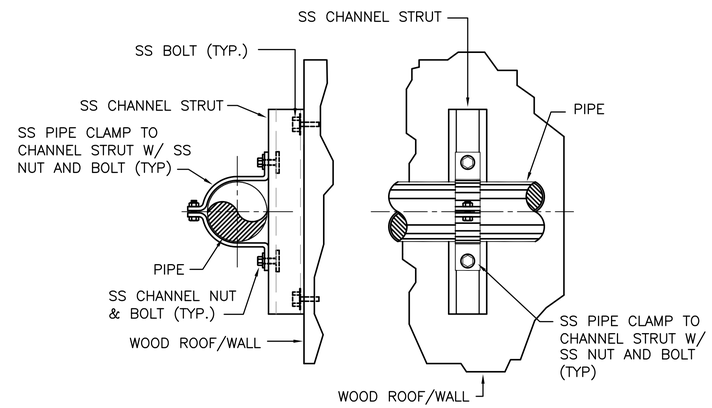

SECTION PLAN

PIPE ROOF/WALL SUPPORT (2 / P4.1)

NTS

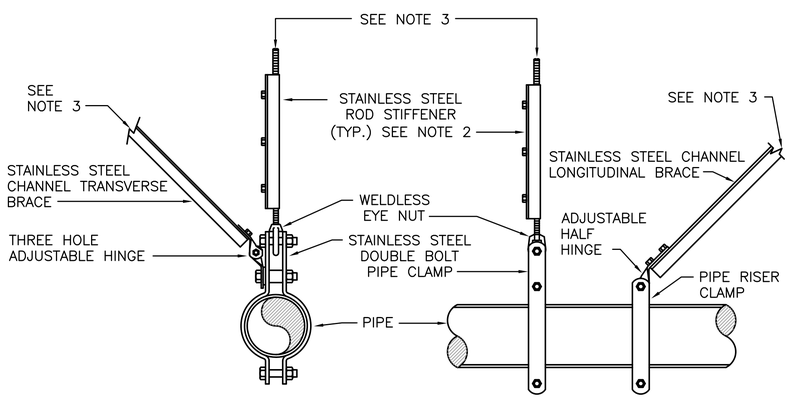

NOTES:

1. ALL PIPE SUPPORTS SHALL BE PIPING TECHNOLOGY, INC. OR APPROVED EQUAL.
2. INSTALL ROD STIFFENER WHEN LENGTH EXCEEDS THE SCHEDULE LENGTH:
3. REFER TO TYPICAL STRUCTURAL CONCRETE SLAB SUPPORT AND SEISMIC ATTACHMENT DETAIL FOR APPLICATION CONTINUATION.

TYPICAL PIPE HANGER SUPPORT DETAIL (4 / P4.1)

NTS

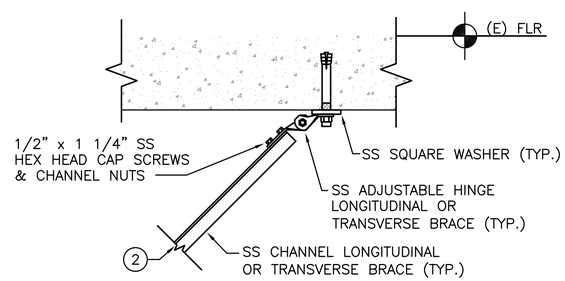

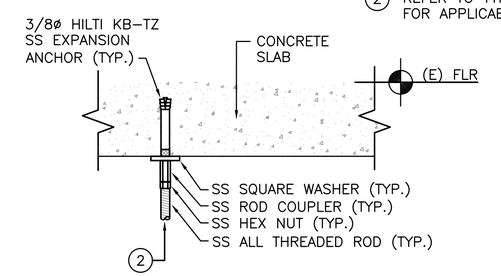

TYPICAL STRUCTURAL CONCRETE SLAB PIPE SUPPORT AND SEISMIC ATTACHMENTS (5 / P4.1)

NTS

Creegan+D'Angelo INFRASTRUCTURE ENGINEERS
170 Columbus Ave., Suite 240
San Francisco, CA 94133
Tel (415) 834-2010
Fax (415) 834-2011
www.cdengineers.com

REGISTERED PROFESSIONAL ENGINEER PATRICK R. MALLILIN NO. M 30258 EXP. 06/30/13 MECHANICAL STATE OF CALIFORNIA

YEI ENGINEERS, INC.
7700 Edgewater Drive, Suite 128, Oakland, CA 94621
Phone: (510) 383-1050 Fax: (510) 383-1057

SHEET NOTES

1. PROVIDE TRANSVERSE SEISMIC BRACING AT 20'-0" MAX. AND EVERY CHANGE OF DIRECTION.
2. PROVIDE LONGITUDINAL SEISMIC BRACING AT 40'-0" O.C. MAX., MINIMUM OF 2 REQUIRED.
3. BRACE ALL PIPING AND EQUIPMENT TRANSVERSELY AND LONGITUDINALLY ACCORDING TO SMACNA GUIDELINES FOR SEISMIC RESTRAINTS OF MECHANICAL SYSTEM AND PIPING SYSTEM.
4. THE STRUCTURAL ENGINEER OF RECORD SHALL VERIFY THE ADEQUACY OF THE STRUCTURE TO SUPPORT THE HANGER AND BRACE LOADS.
5. INSTALL PIPE INSULATION BETWEEN DISSIMILAR METALS TO PREVENT CONTACT BETWEEN DISSIMILAR METALS.
6. PROVIDE LATERAL BRACING, SS HANGERS INCLUDING HARDWARE AND 4-BAND TYPE NO-HUB COUPLINGS PER 2010 PORT OF SF PLUMBING CODE FOR REQUIREMENTS OF UNDER-PIER PIPING, PER SECTION 314.0.

KEY NOTES

(1) INSTALL ROD STIFFENER AT ALL TRANSVERSE AND LONGITUDINAL BRACE LOCATIONS AND WHEN THE ROD LENGTH EXCEEDS THE MAX. VALUE INDICATED IN THE SCHEDULE BELOW. ROD STIFFENER SHALL EXTEND ALONG THE FULL LENGTH OF THE ROD.

MAX. PIPE SIZE, IN.	ROD SIZE, IN.	MAX. ROD LENGTH, IN.
1/2 UP TO 2	3/8 1/2	19
2 1/2 TO 3	5/8	25
4 TO 5	3/4 7/8	31
6		37
8 TO 10		43

(2) REFER TO TYPICAL PIPE HANGER SUPPORT DETAIL FOR APPLICABLE CONTINUATION.

NO.	DATE	DESCRIPTION	BY	APP.
0	11/02/12	ISSUED FOR RESTROOM PERMIT		

TABLE OF REVISIONS
CHECK WITH TRACING TO SEE IF YOU HAVE LATEST REVISION

REFERENCE INFORMATION & FILE NO. OF SURVEYS

PORT OF SAN FRANCISCO

SAN FRANCISCO PORT COMMISSION
PORT OF SAN FRANCISCO
DEPARTMENT OF ENGINEERING

DESIGNED: AK DATE: 10/26/12
DRAWN: RH DATE: 10/26/12
CHECKED: PM DATE: 10/26/12

APPROVED BY SAN FRANCISCO PORT COMMISSION
DATE: _____
CHIEF HARBOR ENGINEER

SCALE: AS NOTED
SHEET OF SHEETS _ OF _

PIER 29
RESTROOM REMODEL

PLUMBING DETAILS

CONTRACT NO.
DRAWING NO. P4.1
FILE NO. XXXX-29-S
REV. NO.

VIEW: PLOT1

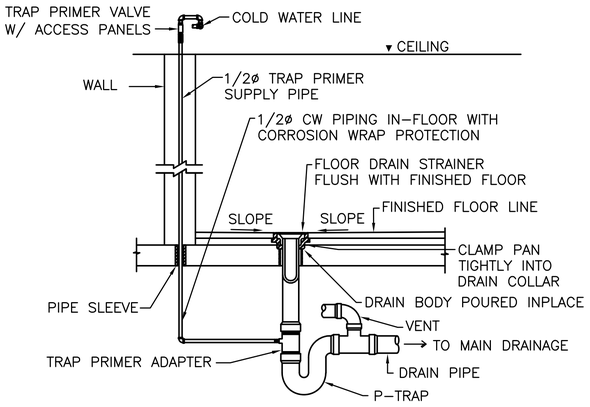

TYPICAL FLOOR DRAIN W/TRAP PRIMER AND VENT (1 / P4.2)

NTS

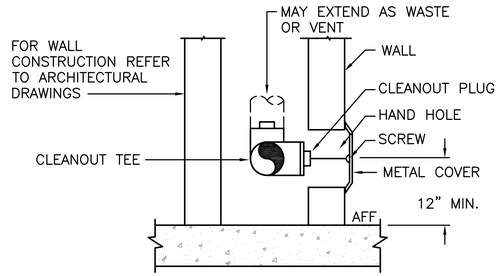

TYPICAL WALL CLEANOUT (2 / P4.2)

NTS

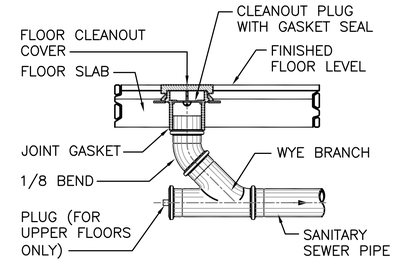

TYPICAL FLOOR CLEANOUT (3 / P4.2)

NTS

Creegan+D'Angelo INFRASTRUCTURE ENGINEERS
170 Columbus Ave., Suite 240
San Francisco, CA 94133
Tel (415) 834-2010
Fax (415) 834-2011
www.cdengineers.com

YEI ENGINEERS, INC.
7700 Edgewater Drive, Suite 128, Oakland, CA 94621
Phone: (510) 383-1050 Fax: (510) 383-1057

REGISTERED PROFESSIONAL ENGINEER PATRICK R. MALLLIN NO. M 30258 EXP. 06/30/13 MECHANICAL STATE OF CALIFORNIA

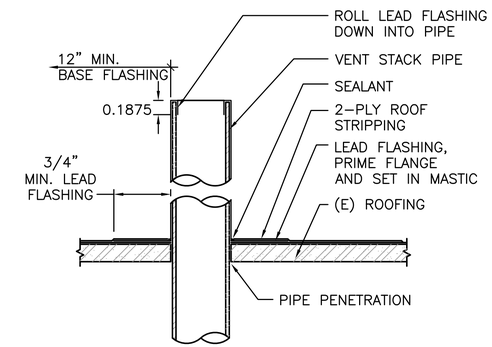

TYPICAL VENT PIPE ROOF PENETRATION (VTR) (4 / P4.2)

NTS

UL/cUL SYSTEM NO. C-AJ-5096

F-RATING = 2-HR.
T-RATING = 0-HR.
L-RATING AT AMBIENT = 4 CFM/SQ. FT.
L-RATING AT 400° F = LESS THAN 1 CFM/SQ. FT.

TOP VIEW

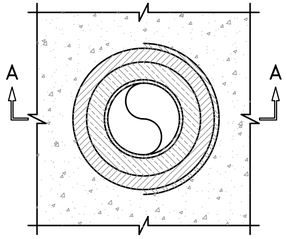

SECTION A-A

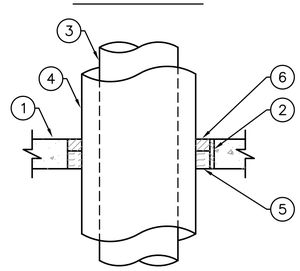

NOTES:

1. MAXIMUM DIAMETER OF OPENING = 18".
2. ANNULAR SPACE = MINIMUM 1/2", MAXIMUM 1-7/8".
3. MINIMUM 1" DEPTH HILTI FS-ONE INTUMESCENT FIRESTOP SEALANT IS REQUIRED ON BOTH SIDES OF A WALL ASSEMBLY.

KEY NOTES:

(1) CONCRETE FLOOR OR WALL ASSEMBLY (2-HR. FIRE-RATING) :
A. LIGHTWEIGHT OR NORMAL WEIGHT CONCRETE FLOOR OR WALL (MIN. 2-1/2" THICK).
B. ANY UL/ULC CLASSIFIED CONCRETE BLOCK WALL.

(2) OPTIONAL : MAXIMUM 18" NOMINAL DIAMETER STEEL PIPE SLEEVE (SCHEDULE 10 OR HEAVIER).

(3) PENETRATING ITEM TO BE ANY ONE OF THE FOLLOWING :
A. MAXIMUM 12" NOMINAL DIAMETER STEEL PIPE (SCHEDULE 10 OR HEAVIER).
B. MAXIMUM 6" NOMINAL DIAMETER COPPER PIPE.

(4) NOMINAL 1-1/2" THICK GLASS-FIBER PIPE INSULATION.

(5) MINIMUM 1-1/2" THICKNESS MINERAL WOOL (MIN. 4 PCF DENSITY) TIGHTLY PACKED.

(6) MINIMUM 1" DEPTH HILTI FS-ONE INTUMESCENT FIRESTOP SEALANT.

INSULATED METAL PIPE THRU RATED CONCRETE FLOOR/WALL OR BLOCK WALL (5 / P4.2)

NTS

SYSTEM NO. C-AJ-1149

F RATING - 2 HR
T RATING - 0 HR

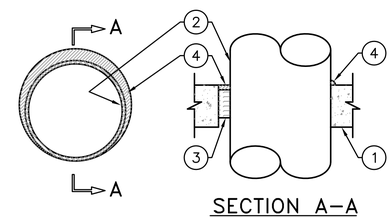

SECTION A-A

KEY NOTES:

(1) FLOOR OR WALL ASSEMBLY - MIN 4-1/2 IN. THICK REINFORCED LIGHTWEIGHT OR NORMAL WEIGHT (100-150 PCF) CONCRETE. WALL MAY ALSO BE CONSTRUCTED OF ANY UL CLASSIFIED CONCRETE BLOCKS *. MAX DIA. OF OPENING IS 12 IN.

(2) THROUGH PENETRANTS - ONE METALLIC PIPE, CONDUIT OR TUBING TO BE INSTALLED WITHIN THE FIRESTOP SYSTEM. PIPE, CONDUIT OR TUBING TO BE RIGIDLY SUPPORTED ON BOTH SIDES OF FLOOR OR WALL ASSEMBLY. THE ANNULAR SPACE SHALL BE 0 IN. (POINT CONTACT) TO MAX 1-1/4 IN. THE FOLLOWING TYPES AND SIZES OF METALLIC PIPES, CONDUITS OR TUBING MAY BE USED:
A. STEEL PIPE - NOM 10 IN. DIA. (OR SMALLER) SCHEDULE 10 (OR HEAVIER) STEEL PIPE.
B. COPPER TUBING - NOM 4 IN. DIA. (OR SMALLER) TYPE L (OR HEAVIER) COPPER TUBING.
C. COPPER PIPE - NOM 4 IN. DIA. (OR SMALLER) REGULAR (OR HEAVIER) COPPER PIPE.

(3) PACKING MATERIAL - MIN 3 IN. THICKNESS OF MIN 4 PCF MINERAL WOOL BATT INSULATION FOR NOM 4 IN. DIA. (AND SMALLER) PIPES, CONDUITS OR TUBINGS AND A MIN 4 IN. THICKNESS OF MIN 4 PCF MINERAL WOOL BATT INSULATION FOR PIPE GREATER THAN NOM 4 IN. DIA., FIRMLY PACKED INTO OPENING AS A PERMANENT FORM. PACKING MATERIAL TO BE RECESSED FROM TOP SURFACE OF FLOOR OR FROM BOTH SURFACES OF WALL AS REQUIRED TO ACCOMMODATE THE REQUIRED THICKNESS OF FILL MATERIAL.

(4) FILL, VOID OR CAVITY MATERIAL* - SEALANT - MIN 1/2 IN. THICKNESS OF FILL MATERIAL APPLIED WITHIN THE ANNULUS, FLUSH WITH THE TOP SURFACE OF FLOOR OR BOTH SURFACES OF WALL. AT THE POINT OF CONTACT LOCATION BETWEEN PIPE AND CONCRETE, A MIN 1/2 IN. DIA. BEAD OF FILL MATERIAL SHALL BE APPLIED AT THE CONCRETE/PIPE INTERFACE ON THE TOP SURFACE OF FLOOR AND ON BOTH SURFACES OF WALL.
HILTI CONSTRUCTION CHEMICALS, DIV OF
HILTI INC - CP601S, CP606 OR FS-ONE SEALANT
(NOTE: L RATINGS APPLY ONLY WHEN FS-ONE SEALANT IS USED).
*BEARING THE UL CLASSIFICATION MARKING

PIPE PENETRATION THRU RATED WALL AND FLOOR (6 / P4.2)

NTS

SHEET NOTE

1. PROVIDE LATERAL BRACING, SS HANGERS INCLUDING HARDWARE AND 4-BAND TYPE NO-HUB COUPLINGS PER 2010 PORT OF SF PLUMBING CODE FOR REQUIREMENTS OF UNDER-PIER PIPING, PER SECTION 314.0.

NO.	DATE	DESCRIPTION	BY	APP.
0	11/02/12	ISSUED FOR RESTROOM PERMIT		

TABLE OF REVISIONS
CHECK WITH TRACING TO SEE IF YOU HAVE LATEST REVISION

REFERENCE INFORMATION & FILE NO. OF SURVEYS

SAN FRANCISCO PORT COMMISSION
PORT OF SAN FRANCISCO
DEPARTMENT OF ENGINEERING

DESIGNED: AK DATE: 10/26/12
DRAWN: RH DATE: 10/26/12
CHECKED: PM DATE: 10/26/12

APPROVED BY SAN FRANCISCO PORT COMMISSION
DATE: _____
CHIEF HARBOR ENGINEER

SCALE: AS NOTED
SHEET OF SHEETS _ OF _

PIER 29
RESTROOM REMODEL

PLUMBING DETAILS

CONTRACT NO.
DRAWING NO. P4.2
FILE NO. XXXX-29-S
REV. NO.

VIEW: PLOT1

Creegan+D'Angelo
INFRASTRUCTURE ENGINEERS
170 Columbus Ave., Suite 240
San Francisco, CA 94133
Tel (415) 834-2010
Fax (415) 834-2011
www.cdengineers.com

YEI ENGINEERS, INC.
7700 Edgewater Drive, Suite 128, Oakland, CA 94621
Phone: (510) 383-1050 Fax: (510) 383-1057

REGISTERED PROFESSIONAL ENGINEER
PATRICK R. MALLILIN
NO. M 30258
EXP. 06/30/13
MECHANICAL
STATE OF CALIFORNIA

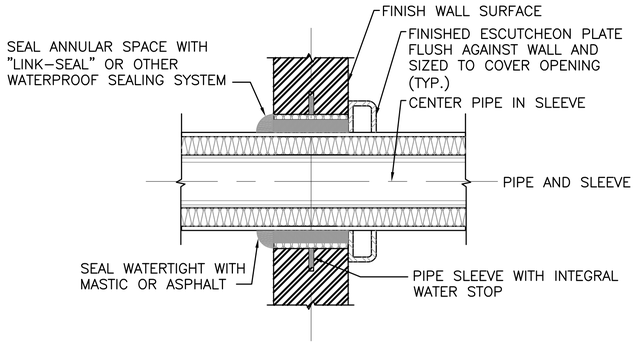

EXTERIOR WALL

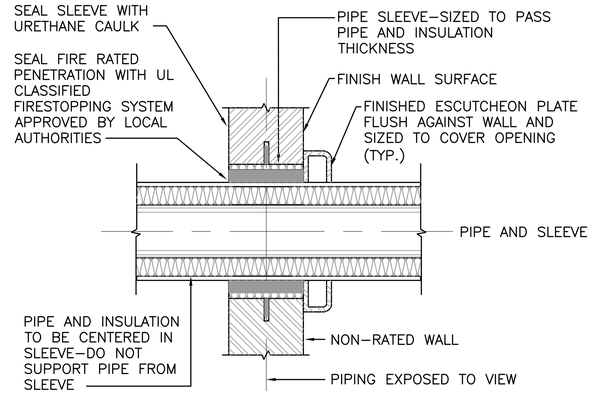

INTERIOR WALLS

PIPE PENETRATION THRU NON-RATED WALL (1 / P4.3)

NTS

SHEET NOTE

1. PROVIDE LATERAL BRACING, SS HANGERS INCLUDING HARDWARE AND 4-BAND TYPE NO-HUB COUPLINGS PER 2010 PORT OF SF PLUMBING CODE FOR REQUIREMENTS OF UNDER-PIER PIPING, PER SECTION 314.0.

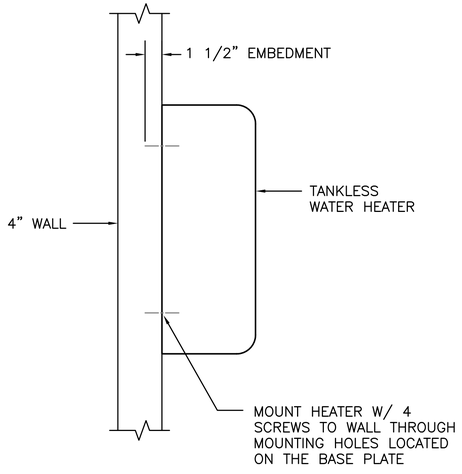

NOTE: FOLLOW MANUFACTURER'S INSTALLATION GUIDELINES

TYP. TANKLESS WATER HEATER (2 / P4.3)

NTS

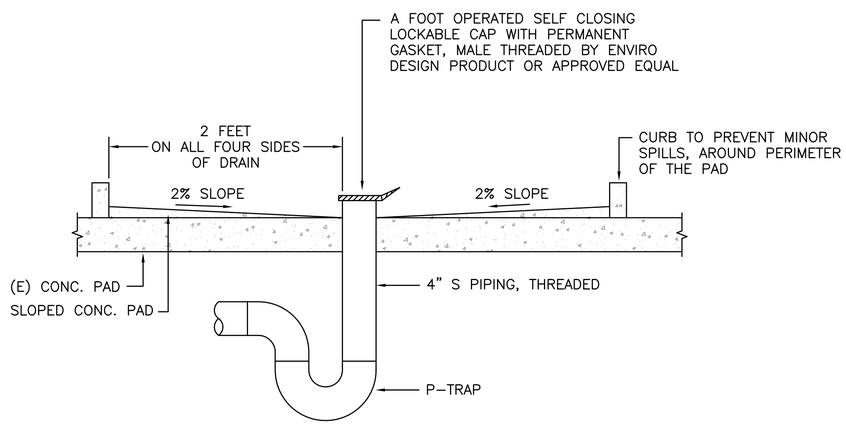

NOTE: SEE ARCHITECTURAL AND STRUCTURAL DRAWINGS FOR SLOPED CONCRETE PAD AND CURB.

ADD ALTERNATE BID:
PORTABLE DRAINAGE HOSE CONNECTION (3 / P4.3)

NTS

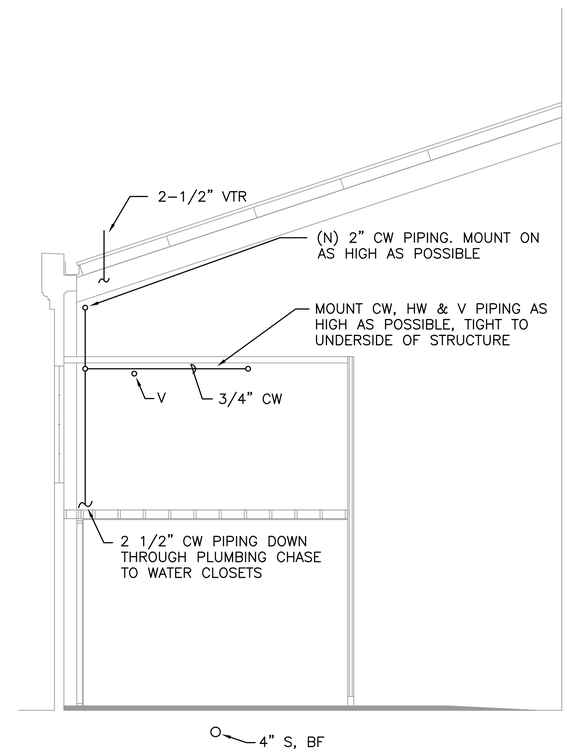

SECTION THROUGH BATHROOM (4 / P4.3)

NTS

NO.	DATE	DESCRIPTION	BY	APP.
0	11/02/12	ISSUED FOR RESTROOM PERMIT		

TABLE OF REVISIONS
CHECK WITH TRACING TO SEE IF YOU HAVE LATEST REVISION

REFERENCE INFORMATION & FILE NO. OF SURVEYS

PORT OF SAN FRANCISCO

SAN FRANCISCO PORT COMMISSION
PORT OF SAN FRANCISCO
DEPARTMENT OF ENGINEERING

DESIGNED: AK DATE: 10/26/12
DRAWN: RH DATE: 10/26/12
CHECKED: PM DATE: 10/26/12

APPROVED BY SAN FRANCISCO PORT COMMISSION
DATE: _____
CHIEF HARBOR ENGINEER

SCALE: AS NOTED
SHEET OF SHEETS _ OF _

PIER 29
RESTROOM REMODEL
PLUMBING DETAILS

CONTRACT NO.
DRAWING NO. P4.3
FILE NO. XXXX-29-S
REV. NO.

VIEW: PLOT1

ELECTRICAL LEGEND

SYMBOL	ABBREV.	DESCRIPTION
500AT 600AF		CIRCUIT BREAKER, RATING AS INDICATED
		DUPLEX RECEPTACLE, 120V
J		JUNCTION BOX, NEMA 4X
EF		EXHAUST FAN
WH		WATER HEATER
OS		OCCUPANCY SENSOR
S		SINGLE POLE DISCONNECT
$3a		LIGHT SWITCH 3 = THREE WAY a = SUBSCRIPT INDICATES CIRCUIT
		PENDENT MOUNTED EXIT SIGN. DARK QUADRANTS INDICATE FACES ILLUMINATED. DIRECTIONAL ARROWS INDICATED.
		WALL MOUNTED EXIT SIGN. DARK QUADRANTS INDICATE FACES ILLUMINATED. DIRECTIONAL ARROWS INDICATED.
		WALL MOUNTED OUTDOOR RATED LIGHT FIXTURE
		LIGHT FIXTURE
		FLUORESCENT LIGHT FIXTURE
		FLUORESCENT LIGHT FIXTURE WITH BATTERY BACKUP FOR EGRESS
		EGRESS LIGHTS WITH BATTERY BACK–UP
		DISCONNECT SWITCH, NEMA 4X
		SURFACE MOUNTED PANELBOARD, NEMA 1
		EXPOSED CONDUIT ALONG CEILING OR WALL.
		EXPOSED CONDUIT BELOW DECK
		RACEWAY ROUTED AWAY FROM VIEWER
		RACEWAY ROUTED TOWARD VIEWER
		LIQUIDTIGHT FLEXIBLE CONDUIT
		DEMOLITION

PANEL D–12:
2#12, #12G, 1"

- PANELBOARD NAME
- CIRCUIT
- CONDUIT SIZE
- WIRE SIZE

ABBREVIATIONS

ABBREV.	DESCRIPTION	ABBREV.	DESCRIPTION
A, AMP	AMPERES	(N)	NEW
AC	ASPHALT CONCRETE	NA	NOT APPLICABLE
AFF	ABOVE FINISH FLOOR	NIC	NOT IN CONTRACT
AF	AMP FRAM	NTS	NOT TO SCALE
AT	AMP TRIP	P	POLE
		PH, Ø	PHASE
CAB	CABINET	PNL	PANEL
CKT	CIRCUIT	PT	PRESS TREATED
CU	COPPER	SS	STAINLESS STEEL
DISC	DISCONNECT	SW	SWITCH
DWG	DRAWING	TX	TRANSFORMER
EA	EACH	TYP	TYPICAL
ELEC	ELECTRICAL	UON	UNLESS OTHERWISE NOTED
(E)	EXISTING	V	VOLT
(F)	FUTURE	VA	VOLT–AMPERES
F/I	FURNISH/INSTALL	W	WIRE, WATT
GFI	GROUND FAULT INTERRUPTER	WPC	WEATHER PROOF COVER
GND	GROUND		
GRS	GALVANIZE RIGID STEEL		
JB	JUNCTION BOX		
KV	KILOVOLTS		
KVA	KILOVOLT–AMPERES		
MIN	MINIMUM		
MFR	MANUFACTURER		

DRAWING LIST

DRAWING #	DRAWING TITLE
E0.1	ELECTRICAL ABBREVIATIONS, LEGEND, GENERAL NOTES, AND DRAWING LIST
E0.2	ELECTRICAL SPECIFICATIONS
E0.3	ELECTRICAL SINGLE LINE DIAGRAM, PANELBOARD SCHEDULE
E1.1	ELECTRICAL RESTROOM FLOOR PLANS DEMOLITION
E2.1	ELECTRICAL RESTROOM FLOOR PLANS NEW WORK
E2.2	ELECTRICAL SHED EGRESS LIGHTING NEW WORK

Creegan+D'Angelo INFRASTRUCTURE ENGINEERS
170 Columbus Ave., Suite 240
San Francisco, CA 94133
Tel (415) 834-2010
Fax (415) 834-2011
www.cdengineers.com

YEI ENGINEERS, INC.
7700 Edgewater Drive, Suite 128, Oakland, CA 94621
Phone: (510) 383-1050 Fax: (510) 383-1057

REGISTERED PROFESSIONAL ENGINEER
GEORGE WK CHEUNG
No. E. 14107
EXP. 6/30/13
ELECTRICAL
STATE OF CALIFORNIA

GENERAL NOTES

1. THE ELECTRICAL DRAWINGS ARE DIAGRAMMATIC AND DO NOT SHOW ALL OFFSETS, BENDS, FITTINGS, JUNCTION BOXES, PULL BOXES AND EXPANSION FITTINGS. DETERMINE ACTUAL MATERIAL AND HARDWARE REQUIREMENTS AND VERIFY ALL DIMENSIONS AND EXISTING EQUIPMENT AND STRUCTURAL MEMBER LOCATIONS BY FIELD VERIFICATION.
2. VERIFY EXISTING SITE CONDITIONS, REQUIREMENTS AND EXACT LOCATIONS OF UTILITIES.
3. CLEAN AND RE–LAMP ALL EXISTING LIGHT FIXTURES TO REMAIN IN PLACE.
4. ALL WIRING TO BE DEMOLISHED SHALL BE REMOVED BACK TO RESPECTIVE PANEL.
5. EXISTING CONDUITS: CONTRACTOR MAY REUSE ANY EXISTING CONDUITS PROVIDING THAT MATERIAL AND INSTALLATION MEET NEC. PROVIDE ALL REQUIRED FITTINGS COVERS, GASKETS, SCREWS ETC. TO ENSURE CONDUIT AND NEW WIRES ARE IN COMPLIANCE WITH APPLICABLE CODES. EXISTING CONDUIT CONDITIONS ARE UNKNOWN.
6. VERIFY ALL EXISTING CONDITIONS IN THE FIELD PRIOR TO PURCHASING EQUIPMENT. ADVISE THE PORT IN WRITING IN THE EVENT A CONFLICT OCCURS BETWEEN THE REQUIREMENTS OF THE CONTRACT DOCUMENTS AND ACTUAL FIELD CONDITIONS. THE CONTRACTOR SHALL BEAR ALL COSTS FOR RELOCATION OF EQUIPMENT, PIPING CONDUIT, WIRING ETC., FROM FAILURE TO PROPERLY COORDINATE INSTALLATIONS AND ADVISE OF THE CONFLICT IN WRITING PRIOR TO INSTALLATION.
7. IN CASE OF DIFFERENCE BETWEEN BUILDING CODES, SPECIFICATIONS, INDUSTRY STANDARDS, UTILITY COMPANY REGULATIONS, FIRE INSURANCE CARRIER'S REQUIREMENTS AND CONTRACT DOCUMENTS, THE MOST STRINGENT SHALL GOVERN. PROMPTLY NOTIFY THE PORT IN WRITING OF ANY SUCH DIFFERENCE.
8. PLANS ARE BASED ON ANTICIPATED EQUIPMENT SIZE AND CONFIGURATION. CONTRACTOR SHALL MODIFY ARRANGEMENT TO SUIT ACTUAL PURCHASED EQUIPMENT AS REQUIRED FOLLOWING THE CRITERIA ESTABLISHED BY THESE PLANS. DEPARTURES FROM THE CONTRACT DRAWING RESULTING FROM CHANGES IN EQUIPMENT SIZES AND CONFIGURATIONS, OR RE–ARRANGEMENTS TO ACCOMMODATE FIELD CONDITIONS SHALL BE SUBMITTED IN DETAIL FOR PORT'S APPROVAL.
9. CONTRACTOR SHALL BE RESPONSIBLE FOR PROTECTION AND SHALL REPAIR ADJACENT EXISTING AND/OR NEW SURFACES, AREAS AND PROPERTY THAT MAY BE DAMAGED AS A RESULT OF ANY DEMOLITION AND/OR NEW WORK.
10. EQUIPMENT OF HIGHER ELECTRICAL CHARACTERISTICS MAY BE FURNISHED PROVIDED SUCH PROPOSED EQUIPMENT IS APPROVED IN WRITING AND CONNECTING ELECTRICAL SERVICES, CIRCUIT BREAKERS, AND CONDUIT SIZES ARE APPROPRIATELY MODIFIED WITHOUT COST TO THE PORT. IF MINIMUM ENERGY RATINGS OR EFFICIENCIES ARE SPECIFIED, EQUIPMENT SHALL COMPLY WITH REQUIREMENTS.
11. CONTRACTOR IS TO MAINTAIN RECORDED "AS–BUILT" INFORMATION ON ALL EXISTING SERVICES UNCOVERED DURING CONSTRUCTION AND ALL NEW SERVICES BEING INSTALLED. "AS–BUILT" INFORMATION SHALL BE CLEARLY MARKED IN COLORED PENCIL ON A PRINT OF THE CONTRACT DRAWING. RECORDED INFORMATION SHALL INCLUDE ROUTING AND INVERT ELEVATIONS. AT THE COMPLETION OF THE CONTRACT, THE CONTRACTOR SHALL TURN RECORDED "AS–BUILT" INFORMATION OVER TO THE PORT AND CONTRACTOR TO BE COORDINATED WITH AS BUILT REQUIREMENTS IN SPECIFICATION.
12. CONTRACTOR SHALL BE RESPONSIBLE FOR THE COMPLETE OPERATIONAL AND FUNCTIONALITY OF THE ELECTRICAL SYSTEM AS INDICATED ON DRAWING AND SPECIFICATION.
13. CONTRACTOR SHALL BE RESPONSIBLE FOR PROVIDING MISCELLANEOUS METAL AND SUPPORTS FOR THE PROPER INSTALLATION OF THE CONDUIT SUPPORT TO THE BUILDING STRUCTURE.
14. CONTRACTOR SHALL REMOVE, RELOCATE, REPLACE WITH NEW AND/OR RECONNECT ALL EXISTING SERVICES AS REQUIRED BY NEW CONSTRUCTION.
15. NOT ALL EXISTING ELECTRICAL SYSTEMS ARE SHOWN. CONTRACTOR SHALL BE RESPONSIBLE FOR FIELD VERIFICATION OF EXISTING FIELD CONDITIONS.
16. ALL EXPOSED CONDUITS SHALL RUN PARALLEL OR PERPENDICULAR TO (E) BEAMS OR TRUSSES. CONDUITS, BOXES & FITTINGS SHALL BE PAINTED TO MATCH (E) SURFACES.

NO.	DATE	DESCRIPTION	BY	APP.
0	11/02/12	ISSUED FOR RESTROOM PERMIT		

TABLE OF REVISIONS
CHECK WITH TRACING TO SEE IF YOU HAVE LATEST REVISION

REFERENCE INFORMATION & FILE NO. OF SURVEYS

PORT OF SAN FRANCISCO

SAN FRANCISCO PORT COMMISSION
PORT OF SAN FRANCISCO
DEPARTMENT OF ENGINEERING

DESIGNED: BY DATE: 10/26/12
DRAWN: PW DATE: 10/26/12
CHECKED: GC DATE: 10/26/12

APPROVED BY SAN FRANCISCO PORT COMMISSION
DATE: _____
CHIEF HARBOR ENGINEER

SCALE: NONE
SHEET OF SHEETS _ OF _

PIER 29
RESTROOM REMODEL

ELECTRICAL
ABBREVIATIONS, LEGEND,
GENERAL NOTES, AND DRAWING LIST

CONTRACT NO.
DRAWING NO. E0.1
FILE NO. XXXX–29–S
REV. NO.

VIEW: PLOT1

Creegan+D'Angelo
INFRASTRUCTURE ENGINEERS
170 Columbus Ave., Suite 240
San Francisco, CA 94133
Tel (415) 834-2010
Fax (415) 834-2011
www.cdengineers.com

YEI ENGINEERS, INC.
7700 Edgewater Drive, Suite 128, Oakland, CA 94621
Phone: (510) 383-1050 Fax: (510) 383-1057

REGISTERED PROFESSIONAL ENGINEER
GEORGE WK CHEUNG
No. E. 14107
EXP. 6/30/13
ELECTRICAL
STATE OF CALIFORNIA

SPECIFICATIONS

1.1 ACTION SUBMITTALS

A. PRODUCT DATA: FOR EACH TYPE OF PRODUCT INDICATED. INCLUDE RATED CAPACITIES, OPERATING CHARACTERISTICS, AND FURNISHED SPECIALTIES AND ACCESSORIES.

1.2 CONDUIT

A. ALL CONDUITS, CONDUIT FITTINGS AND SUPPORTS SHALL BE STEEL.

B. ROUTE EXPOSED CONDUIT AND CONDUIT ABOVE ACCESSIBLE CEILINGS PARALLEL OR PERPENDICULAR TO WALLS AND STRUCTURAL MEMBERS, WITH RIGHT–ANGLE TURNS CONSISTING OF SYMMETRICAL BENDS OR CAST METAL FITTINGS. ROUTE CONDUIT TO AVOID ACCESS OPENINGS, ACCESS TO EQUIPMENT, AND LIKE ITEMS.

C. MAINTAIN AT LEAST 6 INCH CLEARANCE BETWEEN CONDUIT AND PIPING. MAINTAIN 12 INCH CLEARANCE BETWEEN CONDUIT AND HEAT SOURCES SUCH AS FLUES, STEAM PIPES, AND HEATING APPLIANCES.

D. ARRANGE CONDUIT SUPPORTS TO PREVENT DISTORTION OF ALIGNMENT BY WIRE PULLING OPERATIONS. SUPPORT SPACING SHALL BE MIN OF 3' AWAY FROM ENCLOSURES, BOXES, AND SUCH, ELSE PROVIDE MIN OF 10' SPACING. FASTEN CONDUIT USING GALVANIZED STRAPS, LAY_IN ADJUSTABLE HANGERS, CLEVIS HANGERS, OR BOLTED, SPLIT, STAMPED GALVANIZED HANGERS.

E. INSTALL NO MORE THAN THE EQUIVALENT OF FOUR 90_DEGREE BENDS BETWEEN BOXES.

F. USE CONDUIT BODIES TO MAKE SHARP CHANGES IN DIRECTION, AS AROUND BEAMS.

G. AVOID MOISTURE TRAPS; WHERE UNAVOIDABLE, PROVIDE JUNCTION BOX WITH DRAIN FITTING AT CONDUIT LOW POINT.

H. USE SUITABLE CONDUIT CAPS TO PROTECT INSTALLED CONDUIT AGAINST ENTRANCE OF DIRT AND MOISTURE.

I. INSTALL EXPANSION–DEFLECTION JOINTS WHERE CONDUIT CROSSES BUILDING EXPANSION AND/OR SEISMIC JOINTS.

J. WHERE CONDUIT PENETRATES FIRE_RATED WALLS AND FLOORS, PROVIDE PIPE SLEEVE TWO SIZES LARGER THAN CONDUIT; PACK VOID AROUND CONDUIT WITH OAKUM AND FILL ENDS OF SLEEVE WITH FIRE_RESISTIVE COMPOUND.

K. PIER INTERIOR LOCATIONS: SHALL BE RIGID METAL CONDUIT. ELECTRICAL METALLIC TUBING (EMT) MAY BE USED IN LIEU OF RIGID CONDUIT FOR EXPOSED WORK AT LEAST 6 FEET ABOVE FINISHED FLOOR INDOORS, AND FOR CONCEALED RUNS IN GYPSUM BOARD PARTITIONS AND ABOVE CEILINGS.

1.3 WIRES AND CONDUCTORS

A. COLOR CODING: SHALL MATCH EXISTING CONDITIONS, UNLESS OTHERWISE NOTED.

B. SIZE SHALL BE PROVIDED AS NOTED IN DRAWINGS.

C. EQUIPMENT GROUNDING: ANY CONDUCTOR INTENDED SOLELY FOR EQUIPMENT GROUNDING PURPOSES SHALL BE EITHER BARE OR GREEN IN COLOR. CONDUCTORS HAVING WHITE COVERING SHALL BE USED ONLY FOR NEUTRAL GROUNDING PURPOSES AND FOR NEUTRAL CONDUCTORS. THIS REQUIREMENT APPLIES TO ALL LIGHTING, POWER, AND CONTROL CIRCUITS.

D. TYPE THHN/THWN–2 RATED 75C IN ACCORDANCE WITH NEMA WC 5, UNLESS OTHERWISE NOTED.

E. ALL FEEDERS AND BRANCH CIRCUITS: COPPER, STRANDED CONDUCTORS.

F. SPLICE CONDUCTORS ONLY IN OUTLET BOXES, JUNCTION BOXES, PULLBOXES, GUTTERS, OR PANELBOARD GUTTERS AS FOLLOWS: 8 AWG OR LARGER CONDUCTORS: JOIN TOGETHER BY COMPRESSION CONNECTORS; BURNDY "HYDENT," THOMAS & BETTS "STAKON," NICOPRESS, OR EQUAL. DO NOT USE SPLIT–BOLT TYPE CONNECTORS.

G. MARKING: IN ADDITION TO COLOR CODING, NUMBER ALL WIRES AT ALL TERMINATION POINTS IN CABINETS, TERMINAL BOXES, EQUIPMENT RACKS, CONTROL PANELS, AND LIKE AREAS. USE PRE–MARKED, SELF–ADHESIVE, WRAP–AROUND CLOTH–TYPE MARKERS; BRADY "PERMA–CODE," THOMAS & BETTS "E–Z_CODE," OR EQUAL.

H. PULL ALL CONDUCTORS INTO A RACEWAY AT THE SAME TIME.

I. LUBRICANTS: USE WIRE–PULLING LUBRICANT FOR PULLING 4 AWG AND LARGER WIRES. USE ONLY TALC OR WIRE–PULLING COMPOUNDS LISTED BY ANY NRTL AS A LUBRICANT FOR PULLING CONDUCTORS THROUGH RACEWAYS. IF CLEANING IS REQUIRED, USE CLEANING AGENTS WHICH WILL NOT DAMAGE CONDUCTOR COVERINGS.

1.5 DISCONNECTS AND SWITCHES

A. SWITCHES SHALL BE INDUSTRIAL GRADE WITH A MINIMUM AMPACITY OF 30A. RATINGS SHALL MATCH AS SHOWN IN DRAWINGS.

B. SWITCHES SHALL HAVE DEFEATABLE DOOR INTERLOCKS THAT PREVENT THE DOOR FROM OPENING WHEN THE HANDLE IS IN THE ON POSITION (EXCEPT FOR DOUBLE–THROW SWITCHES). DEFEATER MECHANISM SHALL BE FRONT ACCESSIBLE.

C. DISCONNECTS AND SWITCH BLADES/LEVERS SHALL BE READILY VISIBLE IN THE "ON" AND "OFF" POSITION.

D. ALL INDOOR ENCLOSURES SHALL BE NEMA 1 UNLESS OTHERWISE NOTED.

E. NAMEPLATE SHALL BE FRONT COVER MOUNTED, CONTAINING A PERMANENT RECORD OF SWITCH TYPE, AMPERE RATING, AND MAXIMUM VOLTAGE RATING. NAMEPLATE SHALL BE PHENOLIC TYPE.

F. INSTALL SWITCH ENCLOSURES PLUMB WITH SUITABLE SUPPORTS AND PER MANUFACTURER'S RECOMMENDATIONS. WHERE MOUNTED ON CONCRETE WALL, INSTALL WITH 1/2 INCHES (13 MM) STEEL SPACERS BEHIND THE SWITCH ENCLOSURE. ALL MOUNTING ATTACHMENTS AND CONNECTIONS SHALL BE DESIGNED IN CONFORMANCE WITH THE MINIMUM LATERAL SEISMIC FORCE OF 0.5W PER CBC.

NO.	DATE	DESCRIPTION	BY	APP.
0	11/02/12	ISSUED FOR RESTROOM PERMIT		

TABLE OF REVISIONS
CHECK WITH TRACING TO SEE IF YOU HAVE LATEST REVISION

REFERENCE INFORMATION & FILE NO. OF SURVEYS

PORT OF SAN FRANCISCO

SAN FRANCISCO PORT COMMISSION
PORT OF SAN FRANCISCO
DEPARTMENT OF ENGINEERING

DESIGNED: DC DATE: 10/26/12
DRAWN: DC DATE: 10/26/12
CHECKED: GC DATE: 10/26/12

APPROVED BY SAN FRANCISCO PORT COMMISSION
DATE: _____
CHIEF HARBOR ENGINEER

SCALE: NONE
SHEET OF SHEETS _ OF _

PIER 29
RESTROOM REMODEL

ELECTRICAL
SPECIFICATIONS

CONTRACT NO.
DRAWING NO. E0.2
FILE NO. XXXX–29–S
REV. NO.

VIEW: PLOT1

Creegan+D'Angelo
INFRASTRUCTURE ENGINEERS
170 Columbus Ave., Suite 240
San Francisco, CA 94133
Tel (415) 834-2010
Fax (415) 834-2011
www.cdengineers.com

REGISTERED PROFESSIONAL ENGINEER
GEORGE WK CHEUNG
No. E. 14107
EXP. 6/30/13
ELECTRICAL
STATE OF CALIFORNIA

YEI ENGINEERS, INC.
7700 Edgewater Drive, Suite 128, Oakland, CA 94621
Phone: (510) 383-1050 Fax: (510) 383-1057

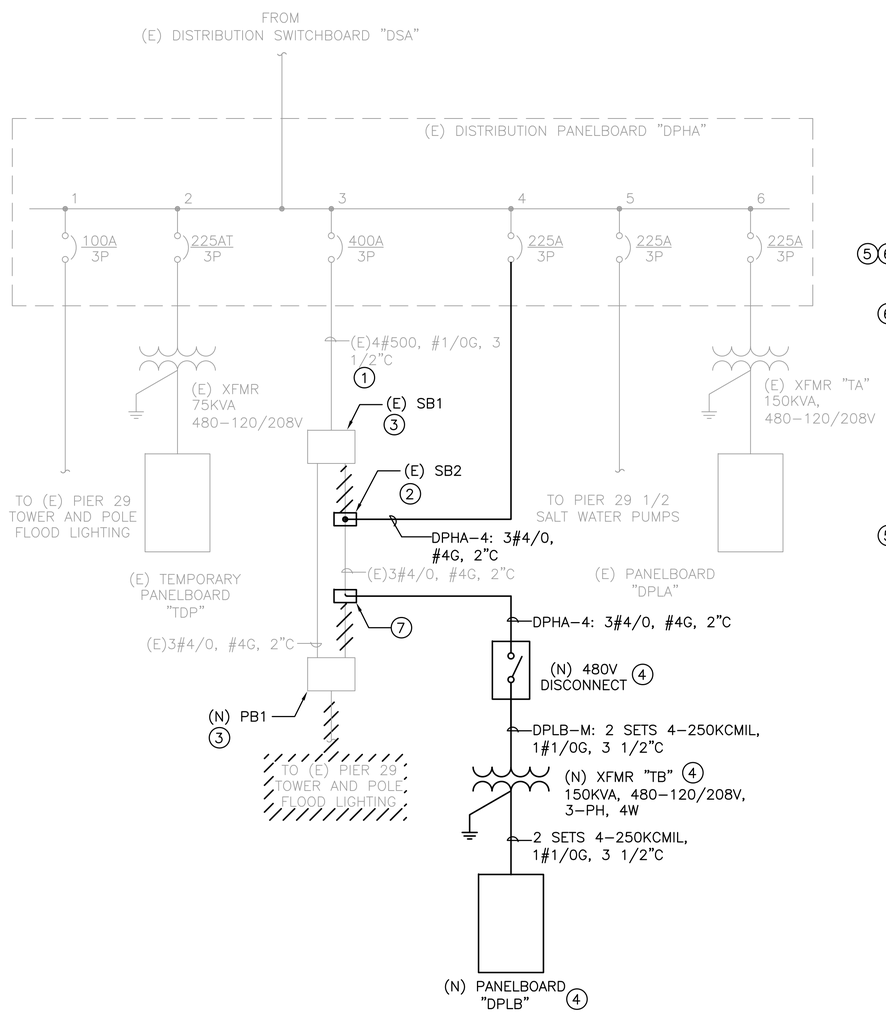

SINGEL LINE DIAGRAM

SCALE: NONE

4

			PANEL:	"DPLB"			VOLTAGE:		208Y120V						
			BUS:	600A			KAIC:		22 KAIC						
			MAIN:	500A			LOCATION:		NEAR RESTROOM						
			PHASE:	3-PHASE			MOUNTING:		SURFACE MOUNTING						
			NEMA:	NEMA 3R			REMARKS:								
PH A VA	PH B VA	PH C VA	DESCRIPTION	CB/ POLE	TYPE	CIRCUIT		TYPE	CB/ POLE	DESCRIPTION	PH A VA	PH B VA	PH C VA		
180			MENS RESTROOM RECEPTACLES	20/1	R	01	02	L	20/2	EGRESS LIGHTS	1100			5 6	
	8000		MENS WATER HEATER	50/2	M	03	04	L				1100			
		8000			M	05	06	L	20/1	WOMENS RESTROOM RECEPTACLES			180	5 6	
180			RESTROOM LIGHTING	20/1	L	07	08								
	314		EF-1 AND EF-2	20/1	H	09	10		20/3	SPARE					
		8000	WOMENS WATER HEATER	50/2	M	11	12							6	
8000					M	13	14								
	64		SOUTH EXTERIOR DOOR LIGHTS	20/1	L	15	16		20/3	SPARE					
			SPARE	20/1		17	18								
						19	20								
			SPARE	20/3		21	22		20/3	SPARE					
						23	24								
						25	26								
			SPARE	20/3		27	28		20/3	SPARE					
						29	30								
						31	32								
			SPARE	20/3		33	34		20/3	SPARE					
						35	36								
						37	38								
			SPARE	20/3		39	40		20/3	SPARE					
						41	42								
						43	44								
			SPARE	20/3		45	46		20/3	SPARE				5	
						47	48								

Type		Connected (VA)	Demand (VA)	Ph.	Load (VA)
C	COMPUTER	–	–	A	9460
H	HVAC	314	471	B	9478
K	KITCHEN	–	–	C	16180
L	LIGHTING	2,624	3,280		
M	MISC.	32,000	32,000		
R	RECEPT.	180	5,090		
	TOTAL	35,118	40,841	113	Amps

PANEL SCHEDULE

SCALE: NONE

KEY NOTES:

1. REPLACE EXISTING 4-500KCMIL AND 1#1/0G WITH CABLES SHOWN.
2. DISCONNECT (E) 4/0 SPLICE TO 500KCMIL CABLE AND SPICE TO NEW 4/0 CABLE WITH (N) SPICE BOX AND ROUTE
3. (E) SPLICE FROM 1-500KCMIL TO 2-4/0 PER PHASE AT BULKHEAD TO SHED THEN BACK FROM 2-4/0 TO 1-500KCMIL AT SHED TO PIER 27.
4. ELECTRICAL EQUIPMENT IS ALREADY PURCHASED AND IN STORAGE.
5. MOVE TOP (E) 3-POLE, 20A BREAKERS TO BOTTOM OF PANELBOARD.
6. REUSE SIX (E) 1-POLE, 20A BREAKERS AND PROVIDE ADDITIONAL FOR QUANTITY SHOWN. PROVIDE (N) 2-POLE, 20A BREAKERS FOR QUANTITY SHOWN. ALL ADDITIONAL BREAKERS SHALL BE OF THE SAME MANUFACTURE AS PANELBOARD.
7. INTERCEPT ONE OF TWO (E) PIER 27 TEMPORARY 4/0 RACEWAYS. REUSE 4/0 CABLE AND PULL CABLES BACK TO (N) JUNCTION BOX AND REROUTE TO PANEL "DPLB" AS SHOWN ON DWG E2.1 WITH (N) CONDUIT.

NO.	DATE	DESCRIPTION	BY	APP.
0	11/02/12	ISSUED FOR RESTROOM PERMIT		

TABLE OF REVISIONS
CHECK WITH TRACING TO SEE IF YOU HAVE LATEST REVISION

REFERENCE INFORMATION & FILE NO. OF SURVEYS

SAN FRANCISCO PORT COMMISSION
PORT OF SAN FRANCISCO
DEPARTMENT OF ENGINEERING

DESIGNED: DC DATE: 10/26/12
DRAWN: DC DATE: 10/26/12
CHECKED: GC DATE: 10/26/12

APPROVED BY SAN FRANCISCO PORT COMMISSION
DATE: _____
CHIEF HARBOR ENGINEER

SCALE: NONE
SHEET OF SHEETS _ OF _

PIER 29
RESTROOM REMODEL

ELECTRICAL
SINGLE LINE DIAGRAM,
PANELBOARD SCHEDULE

CONTRACT NO.
DRAWING NO. E0.3
FILE NO. XXXX-29-S
REV. NO.

VIEW: PLOT1

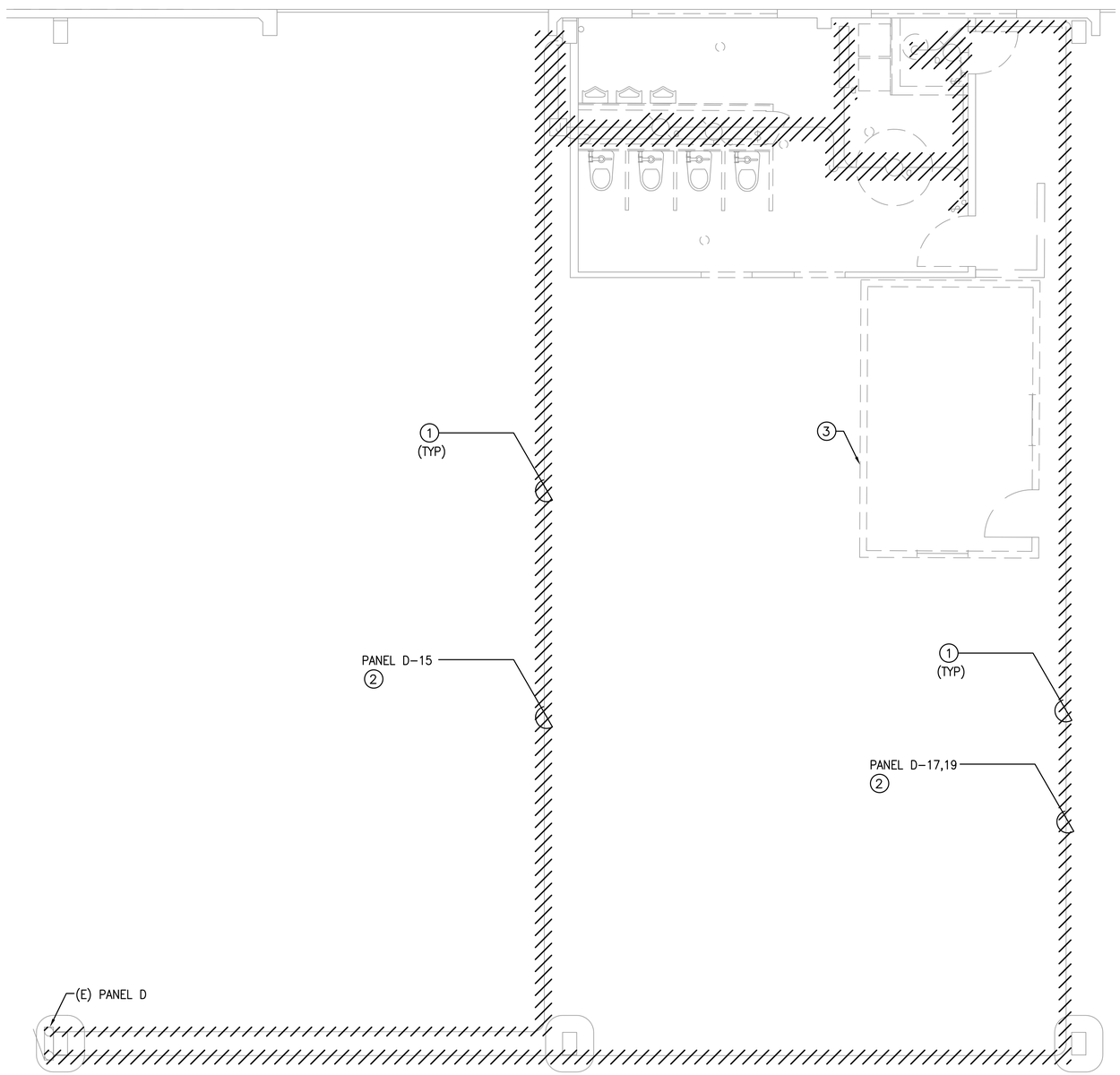

RESTROOM DEMOLITION PLAN

SCALE: 1/4" = 1'-0"

1 / E1.1

Creegan+D'Angelo
INFRASTRUCTURE ENGINEERS
170 Columbus Ave., Suite 240
San Francisco, CA 94133
Tel (415) 834-2010
Fax (415) 834-2011
www.cdengineers.com

REGISTERED PROFESSIONAL ENGINEER
GEORGE WK CHEUNG
No. E. 14107
EXP. 6/30/13
ELECTRICAL
STATE OF CALIFORNIA

YEI ENGINEERS, INC.
7700 Edgewater Drive, Suite 128, Oakland, CA 94621
Phone: (510) 383-1050 Fax: (510) 383-1057

SHEET NOTE:

1. ITEMS SHOWN ARE DIAGRAMMATIC. ACTUAL LOCATIONS SHALL BE VERIFIED BY CONTRACTOR.

KEY NOTES:

1. DEMOLISH ALL ADDITIONAL JUNCTION BOXES FOR RACEWAY NOT SHOWN.
2. DEMOLISH ALL CONDUIT AND WIRES BACK TO SOURCE.
3. SHED TO BE RELOCATED BY OTHERS.

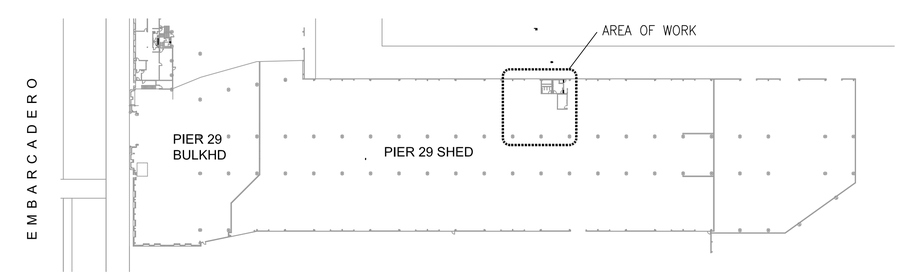

KEY MAP

NO.	DATE	DESCRIPTION	BY	APP.
0	11/02/12	ISSUED FOR RESTROOM PERMIT		

TABLE OF REVISIONS
CHECK WITH TRACING TO SEE IF YOU HAVE LATEST REVISION

REFERENCE INFORMATION & FILE NO. OF SURVEYS

SAN FRANCISCO PORT COMMISSION
PORT OF SAN FRANCISCO
DEPARTMENT OF ENGINEERING

DESIGNED: BY	DATE: 10/26/12
DRAWN: RH	DATE: 10/26/12
CHECKED: GC	DATE: 10/26/12

APPROVED BY
SAN FRANCISCO PORT COMMISSION
DATE: _____
CHIEF HARBOR ENGINEER

SCALE: AS SHOWN
SHEET OF SHEETS _ OF _

PIER 29
RESTROOM REMODEL

ELECTRICAL
RESTROOM FLOOR PLANS
DEMOLITION

CONTRACT NO.
DRAWING NO. E1.1
FILE NO. XXXX-29-S
REV. NO.

VIEW: PLOT1

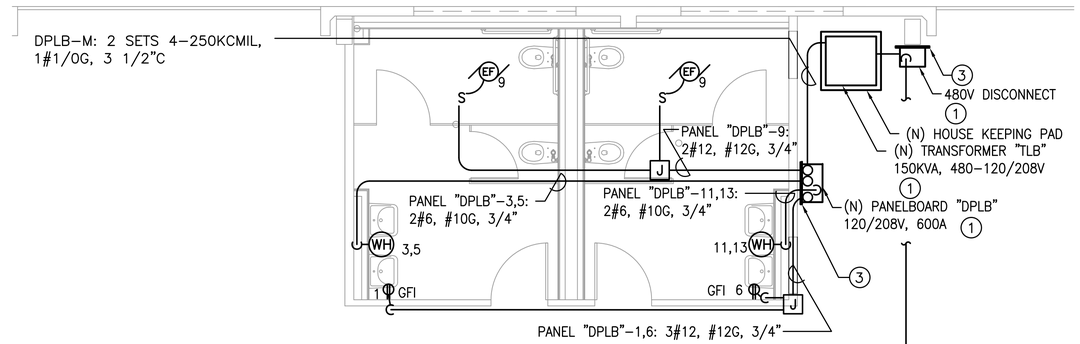

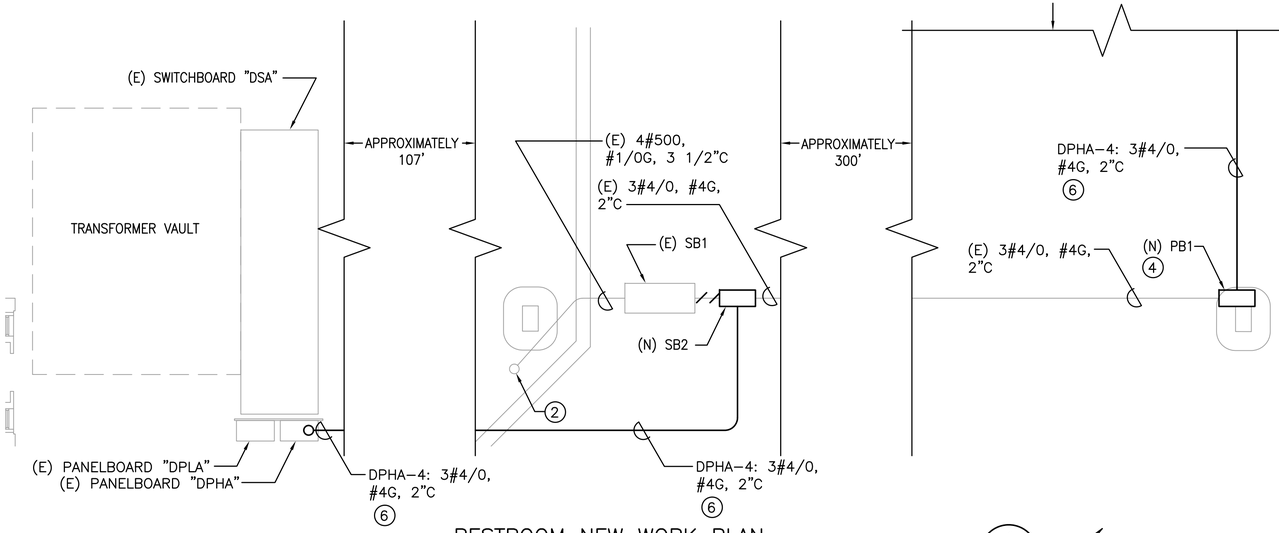

RESTROOM NEW WORK PLAN

SCALE: 1/4" = 1'–0"

1 / E2.1

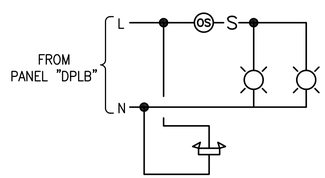

OCCUPANCY SENSOR CONTROL WIRING DIAGRAM

SCALE: NONE

3 / E2.1

SHEET NOTE:

1. ITEMS SHOWN ARE DIAGRAMMATIC. ACTUAL LOCATIONS SHALL BE VERIFIED BY CONTRACTOR.
2. PROVIDE ADDITIONAL JUNCTION BOXES AS NECESSARY PER NEC.

KEY NOTES:

1. ELECTRICAL EQUIPMENT IS ALREADY PURCHASED AND IN STORAGE.
2. RACEWAY CONTINUES UNDER PIER TO PANELBOARD "DPHA" APPROXIMATELY 120' WEST. SEE KEY MAP FOR PANELBOARD "DPHA" LOCATION.
3. PROVIDE RACK FOR SUPPORTING ELECTRICAL EQUIPMENT.
4. PROVIDE NEW JUNCTION BOX AND INTERCEPT ONE OF TWO (E) PIER 27 TEMPORARY 4/0 RACEWAY AND REROUTE TO PANEL "DPLB" AS SHOWN.
5. SEE SHEET E2.2 SHED EGRESS LIGHTING FOR CONTINUATION.
6. ROUTE ALONG (E) OVERHEAD BEAMS.

Creegan+D'Angelo INFRASTRUCTURE ENGINEERS
170 Columbus Ave., Suite 240
San Francisco, CA 94133
Tel (415) 834-2010
Fax (415) 834-2011
www.cdengineers.com

YEI ENGINEERS, INC.
7700 Edgewater Drive, Suite 128, Oakland, CA 94621
Phone: (510) 383-1050 Fax: (510) 383-1057

REGISTERED PROFESSIONAL ENGINEER GEORGE WK CHEUNG No. E. 14107 EXP. 6/30/13 ELECTRICAL STATE OF CALIFORNIA

KEY NOTES CONTINUED:

7. PROVIDE 2X4 SURFACE MOUNT DAYBRITE "ARIOSO" OR APPROVED EQUAL, WITH (2)28WT5 LAMPS, 120–277V, 3500K.
8. PROVIDE LAMAR LIGHTING "B SERIES" FIXTURE OR APPROVED EQUAL. 48" LONG, (1)F32T8 LAMP, 120–277V.
9. PROVIDE 360 DEGREE OCCUPANCY SENSOR. SEE DETAIL 3 FOR WIRING.
10. PROVIDE PHILIPS LIGHTOLIER EM CONTEMPORARY SERIES OR APPROVED EQUAL EMERGENCY LIGHT FIXTURE WITH MR16 LED LAMPS RATED FOR DAMP LOCATIONS, SELF–TESTING DIAGNOSTICS, AND WHITE ENCLOSURE. PROVIDE BACKUP BATTERY PACK WITH EMERGENCY LIGHTING FIXTURE. BATTERY PACK SHALL BE RATED TO PROVIDE MIN. 90 MINUTES OF BACKUP POWER.

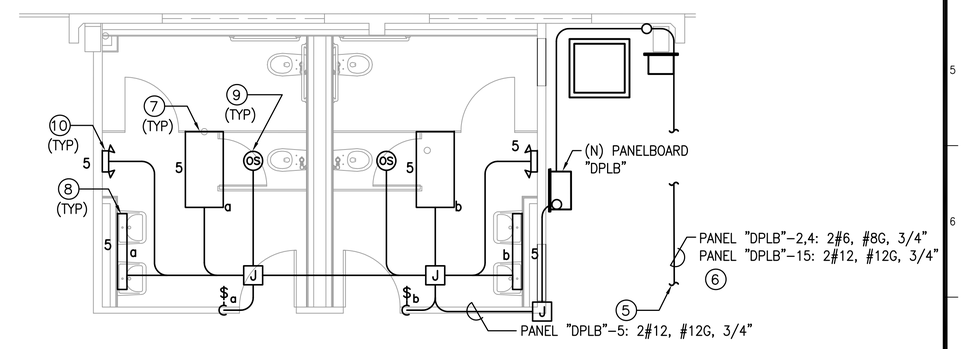

RESTROOM NEW LIGHTING PLAN

SCALE: 1/4" = 1'–0"

2 / E2.1

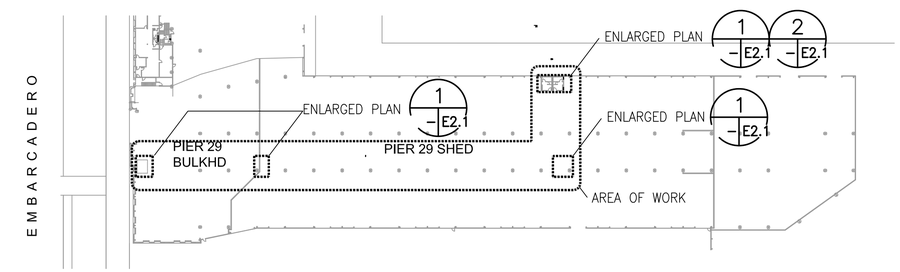

KEY MAP

NO.	DATE	DESCRIPTION	BY	APP.
0	11/02/12	ISSUED FOR RESTROOM PERMIT		

TABLE OF REVISIONS
CHECK WITH TRACING TO SEE IF YOU HAVE LATEST REVISION

REFERENCE INFORMATION & FILE NO. OF SURVEYS

SAN FRANCISCO PORT COMMISSION
PORT OF SAN FRANCISCO
DEPARTMENT OF ENGINEERING

DESIGNED: BY	DATE: 10/26/12
DRAWN: RH	DATE: 10/26/12
CHECKED: GC	DATE: 10/26/12

APPROVED BY SAN FRANCISCO PORT COMMISSION
DATE: _____
CHIEF HARBOR ENGINEER

SCALE: AS SHOWN
SHEET OF SHEETS _ OF _

PIER 29
RESTROOM REMODEL

ELECTRICAL
RESTROOM FLOOR PLANS
NEW WORK

CONTRACT NO.
DRAWING NO. E2.1
FILE NO. XXXX–29–S
REV. NO.

VIEW: PLOT1

KEY NOTES:

1. PROVIDE 100% OUTPUT EMERGENCY BALLAST FOR ALL 4 LAMPS. PROVIDE BACKUP BATTERY PACK AT EGRESS LIGHTING FIXTURE. BATTERY PACK SHALL BE RATED TO PROVIDE MIN. 90 MINUTES OF BACKUP POWER.
2. FIXTURE TYPE – 1ST SOURCE LIGHTING ULB–T5–8–4–54–50K OR APPROVED EQUAL. 8' FLUORESCENT T5HO INDUSTRIAL FIXTURE, PENDANT MOUNT, UNIVERSAL VOLTAGE (120–277V), (4)T5HO 5000K LAMPS. MOUNTING HEIGHT 20'. CONNECTED VOLTAGE SHALL BE 208V.
3. BULKHEAD EGRESS LIGHTING NOT IN CONTRACT.
4. PROVIDE COLUMN MOUNTED EXIT SIGNS. GREEN LED LIT LETTERS WITH DIRECTIONAL ARROW. 8' MOUNTING HEIGHT.
5. PROVIDE WALL MOUNTED EXIT SIGN. GREEN LED LIT LETTERS. MOUNT 6" MIN ABOVE DOOR FRAME.
6. FIXTURE TYPE – GOOSE NECK TYPE FIXTURE BY ANP LIGHTING ORB216 SERIES WITH FROSTED GLASS GLOB. PART # WM55(MOD.)–ORB216–FR–32WPL–120V WITH #51–ARCH. BRONZE FINISH. MOUNT 6" MIN ABOVE DOOR FRAME. PROVIDE WEATHER RATED PHOTO SENSOR INTERFACED WITH LIGHT.
7. SEE DWG E2.1 DETAIL 2 "RESTROOM NEW LIGHTING PLAN" FOR CONTINUATION TO PANEL "DPLB".

SHEET NOTE:

1. THE CONTRACTOR SHALL VERIFY (E) CONDITIONS IN FIELD PRIOR TO START OF WORK.
2. ALL EQUIPMENT SHOWN IS NEW, UNLESS OTHERWISE NOTED.
3. PROVIDE JUNCTION BOX AT EACH LIGHT FIXTURE.
4. EGRESS LIGHTING SPACING SHALL BE AS SHOWN TO MAINTAIN A MIN. 1.0FT ALONG EGRESS PATH.

Creegan+D'Angelo INFRASTRUCTURE ENGINEERS
170 Columbus Ave., Suite 240
San Francisco, CA 94133
Tel (415) 834-2010
Fax (415) 834-2011
www.cdengineers.com

YEI ENGINEERS, INC.
7700 Edgewater Drive, Suite 128, Oakland, CA 94621
Phone: (510) 383-1050 Fax: (510) 383-1057

REGISTERED PROFESSIONAL ENGINEER GEORGE WK CHEUNG No. E. 14107 EXP. 6/30/13 ELECTRICAL STATE OF CALIFORNIA

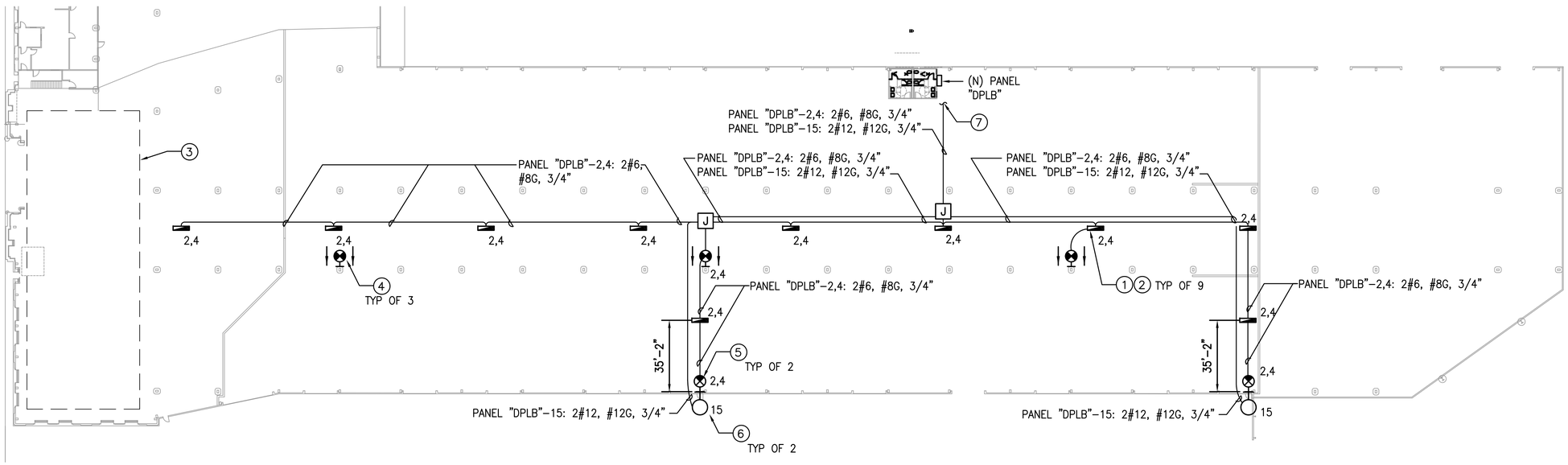

PIER 29 RESTROOM NEW WORK PLAN

SCALE: 1" = 30'–0"

1 – E2.2

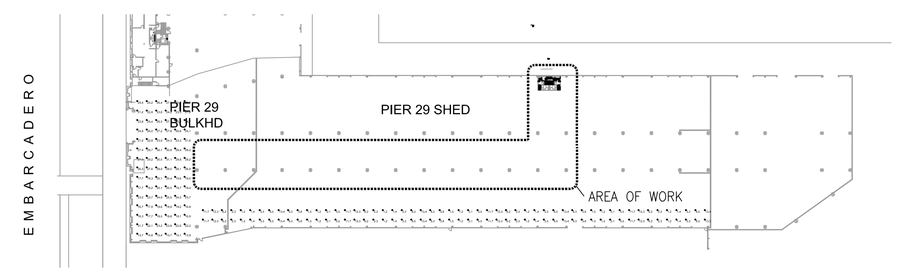

KEY MAP

NO.	DATE	DESCRIPTION	BY	APP.
0	11/02/12	ISSUED FOR RESTROOM PERMIT		

TABLE OF REVISIONS
CHECK WITH TRACING TO SEE IF YOU HAVE LATEST REVISION

REFERENCE INFORMATION & FILE NO. OF SURVEYS

SAN FRANCISCO PORT COMMISSION
PORT OF SAN FRANCISCO
DEPARTMENT OF ENGINEERING

DESIGNED: BY	DATE: 10/26/12	
DRAWN: RH	DATE: 10/26/12	
CHECKED: GC	DATE: 10/26/12	

APPROVED BY SAN FRANCISCO PORT COMMISSION
DATE: _____
CHIEF HARBOR ENGINEER

SCALE: NONE
SHEET OF SHEETS _ OF _

PIER 29
RESTROOM REMODEL

ELECTRICAL
SHED EGRESS LIGHTING
NEW WORK

CONTRACT NO.
DRAWING NO. E2.2
FILE NO. XXXX–29–S
REV. NO.

VIEW: PLOT1